Manufactured for Rooms To Go

VENDOR CODE:MING
ITEM CODE:RT-2337 1 SEATER
SKU#10323361/10323373

Before you begin,Please follow Assembly Instruction carefully.Then follow them step by step

PART LIST

NO	Description	Item	QTY
A	Seat Frame		x1
B	Plastic Leg		x4
C	Washer M8mm		x4
D	Spring Washer M8mm		x4
E	Screw Φ8*70mm Thread Count:45		x4
F	Allen key		x1
G	Backrest		x1

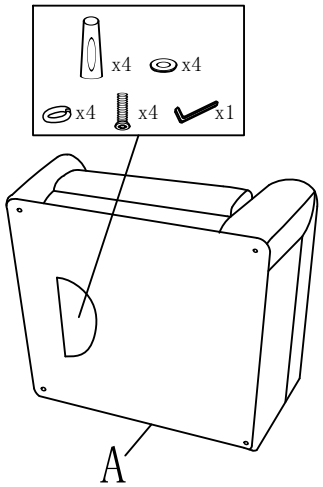

①

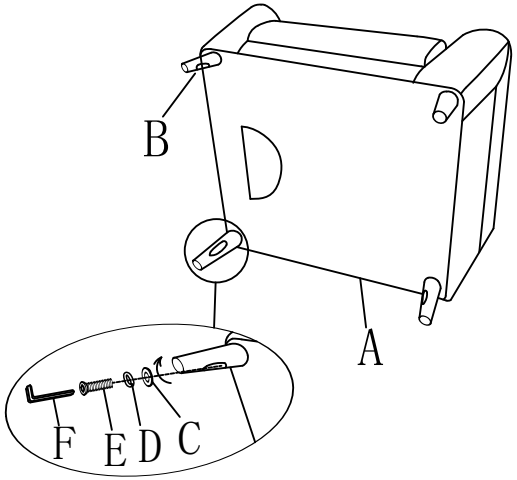

②

③

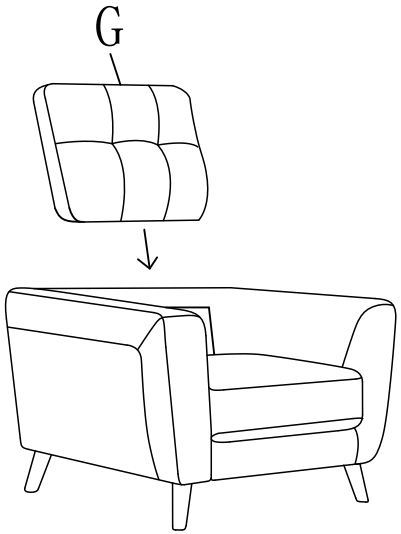

④

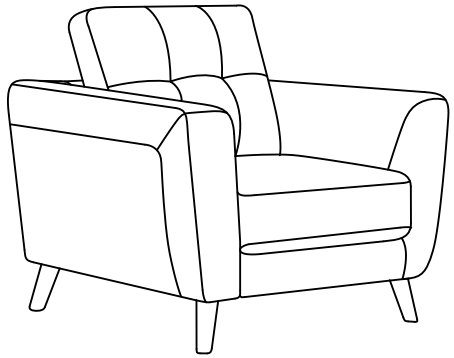

Version number:01
Date: 2025/1/11