Manufactured for Rooms To Go

VENDOR CODE:MING
ITEM CODE:RT-2236 3 SEATER
SKU# 10922361/10922323/10922335

Before you begin,Please follow Assembly Instruction carefully.Then follow them step by step

PART LIST

NO	Description	Item	QTY
A	Seat Frame		x1
B	Left Arm		x1
C	Right Arm		x1
D	Wood Leg		x4
E	Plastic Leg		x2
F	Allen Wrench		x1
G	Screw Φ6*30mm		x16
H	Washer Φ6*18mm		x16
I	Back Cushion		x2
J	Armrest Pillow		x2

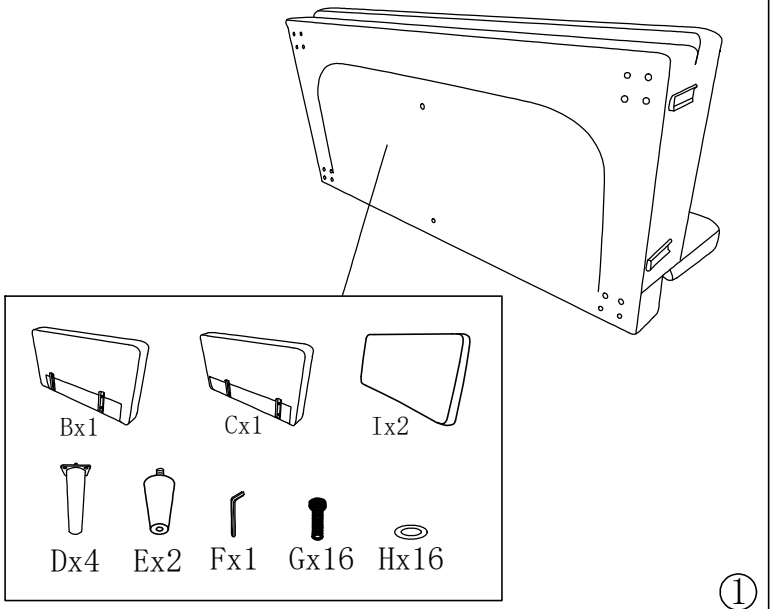

①

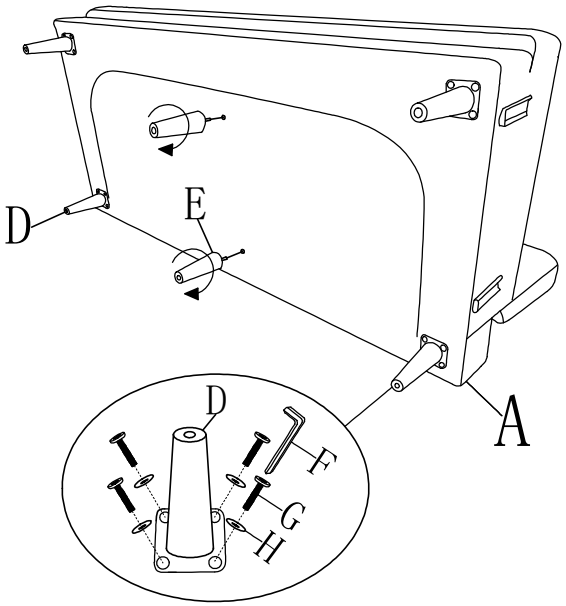

②

③

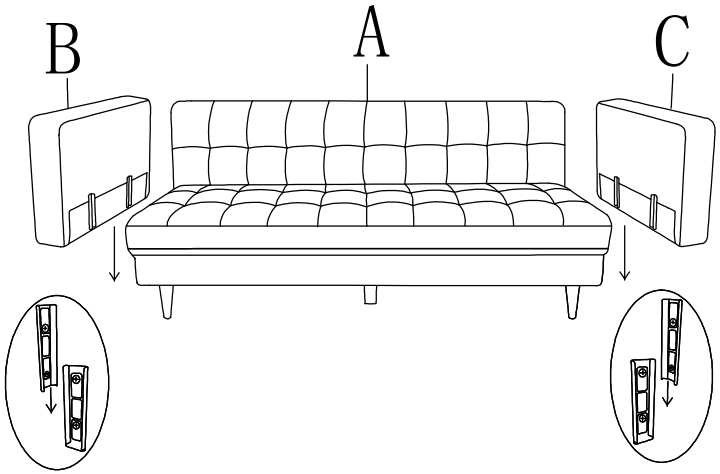
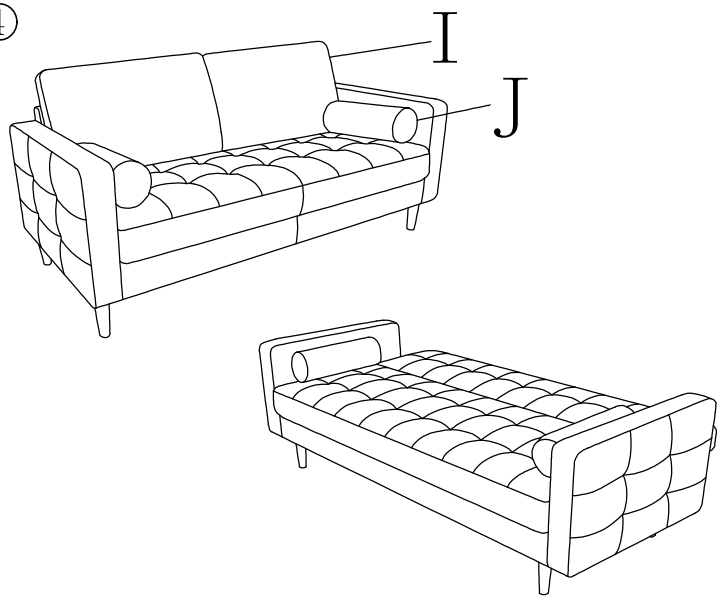
④