ASSEMBLY INSTRUCTIONS

BCHN: L62300700/L62301700/L62302700 NON POWER RECLINING LOVESEAT
SKU: 11416244/11416232/11416256

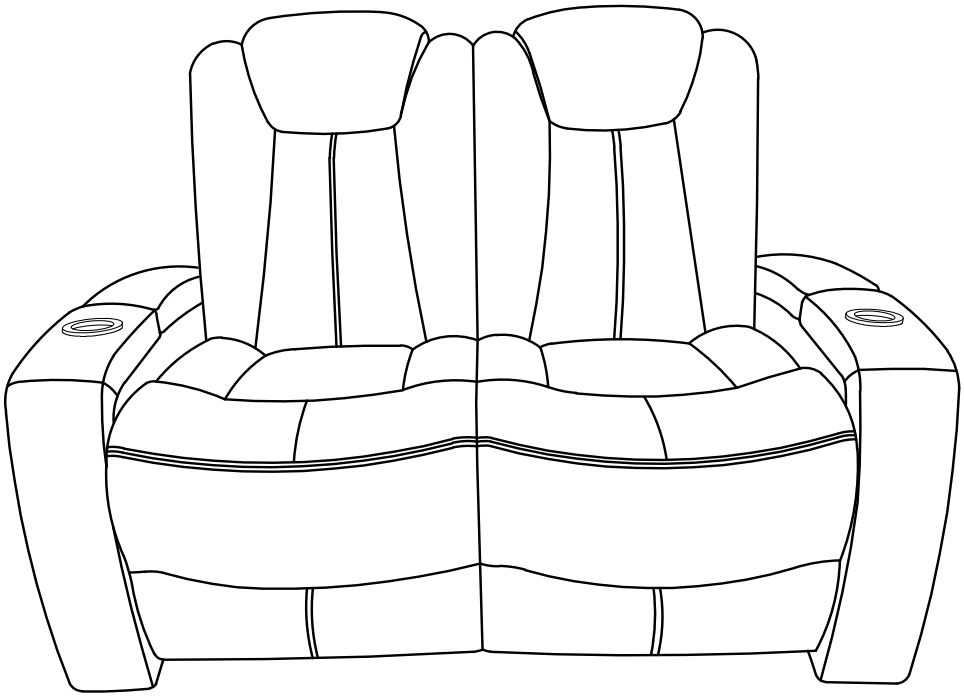

TOOLS REQUIRED: NO TOOLS REQUIRED			
PARTLIST			
NO	Description	Sketch	Quantity
A	SEAT	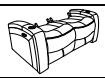	1
B	LEFT BACKREST		1
C	RIGHT BACKREST		1

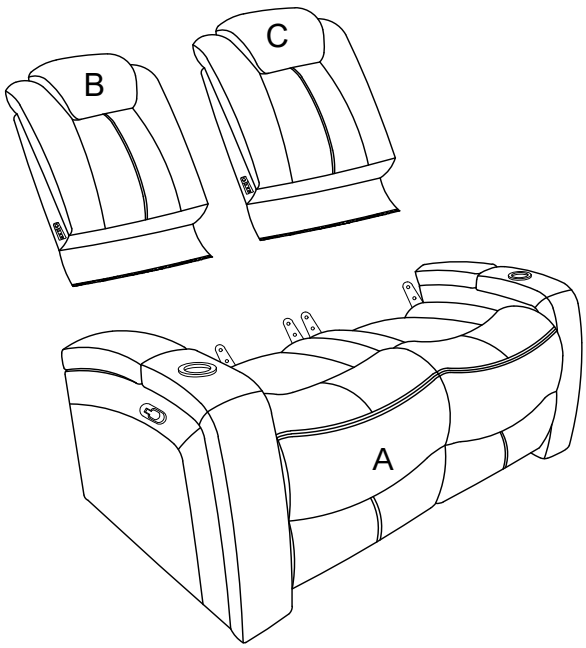

ASSEMBLY INSTRUCTIONS

BCHN: L62300700/L62301700/L62302700 NON POWER RECLINING LOVESEAT
SKU: 11416244/11416232/11416256

Step 1 Attaching the KD Backs (B,C)

Install the Backrest (B,C) into the Seat (A) by positioning the female metal receiver brackets over the male metal posts. Ensure that female metal receiver brackets on each side of the backrest are positioned over the seat metal posts, push down the female brackets over the male posts simultaneously until each side is locked into place with an audile "click" is heard.

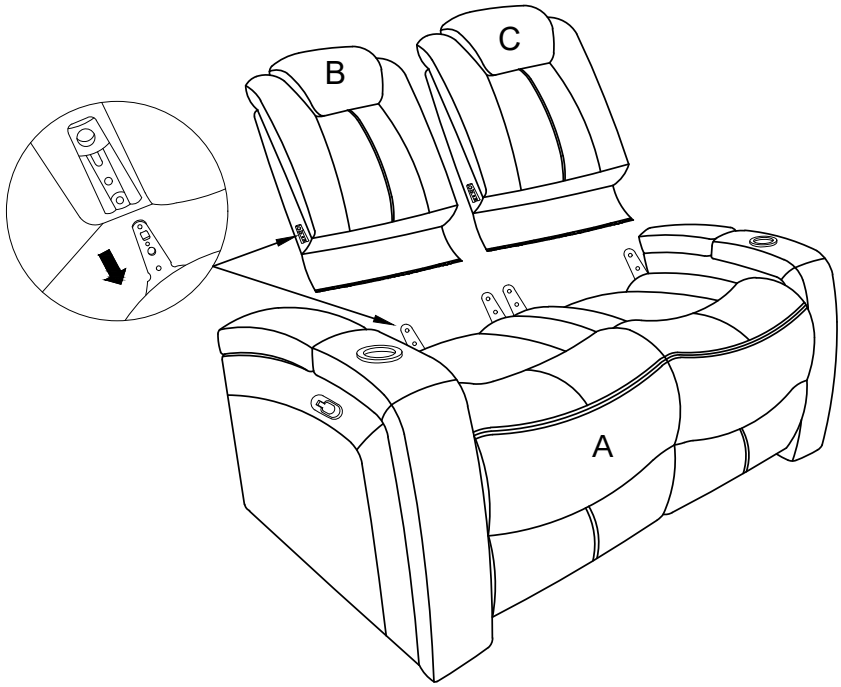

Step 2

Attach the flap to the seat frame by pulling the flap down, and pressing the bottom under the seat base, connecting the velcro.

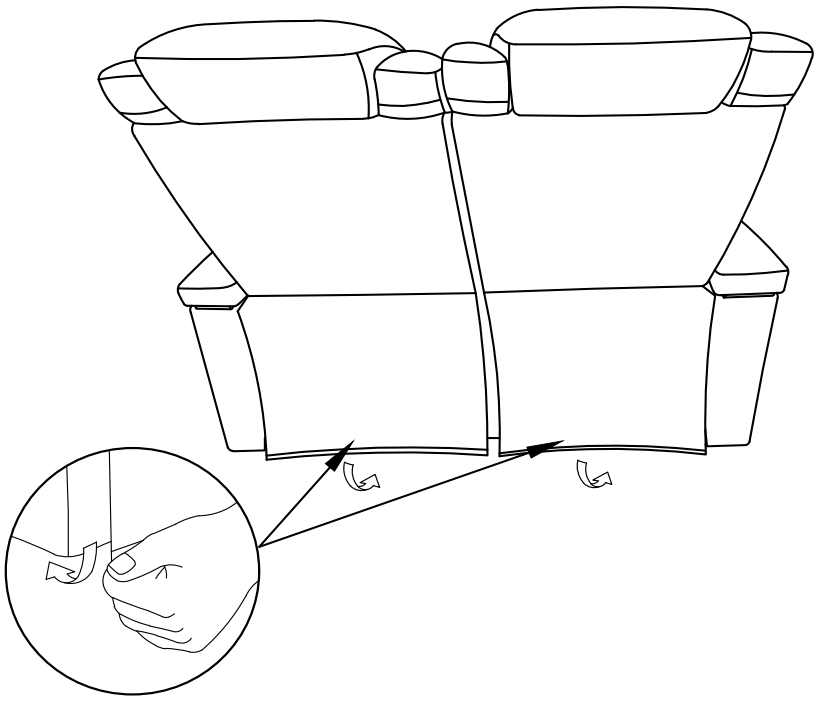

ASSEMBLY INSTRUCTIONS

BCHN: L62300700/L62301700/L62302700 NON POWER RECLINING LOVESEAT
SKU: 11416244/11416232/11416256

1.Press "open footrest"to recline the chair. 2. Press "close footrest" to restore to seat.

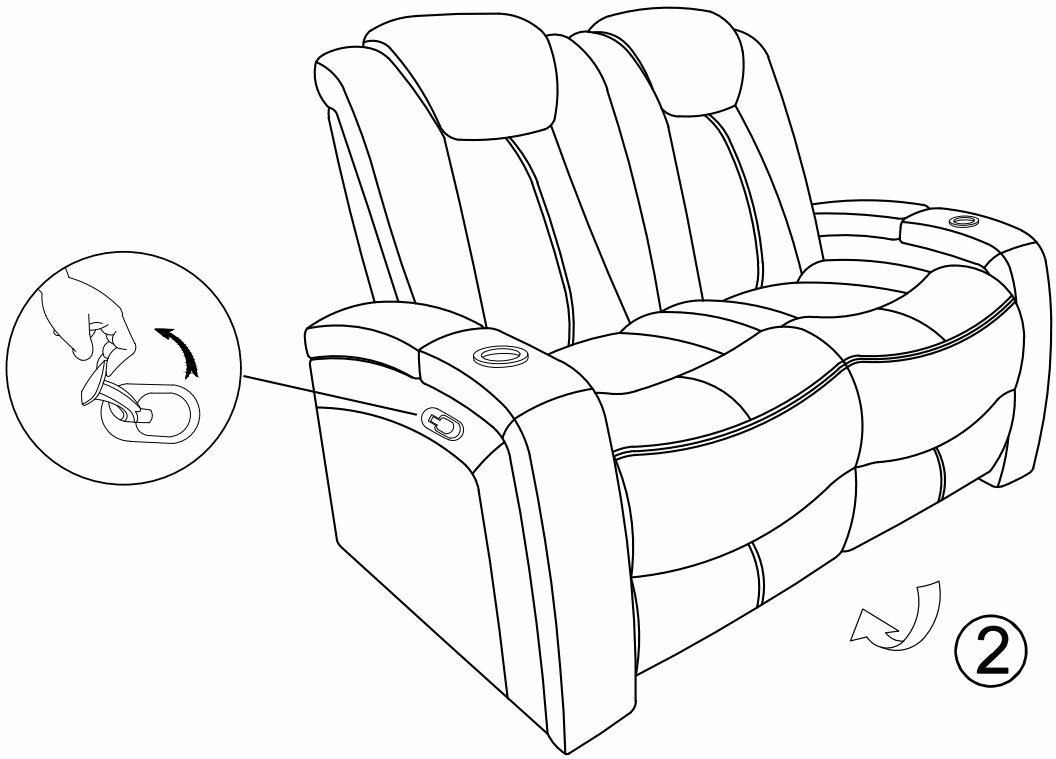

- Please keep the sofa at least 20″ away from heat producers, such as heating equipment and radiator.
- Please avoid placing the sofa under strong sun or strong lamplight to remain its original color.
- Maintain minimum of 6″ space between the furniture backs and wall.

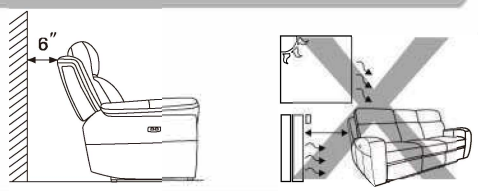

The frame inside your sofa will always remain intact and strong over time, providing you comply with the following recommendations:

- Avoid jumping on the sofa and do not throw yourself violently onto the sofa.
- Do not sit on the arms and/or the Back.
- Do not sit on the footrest when mechanism is open.

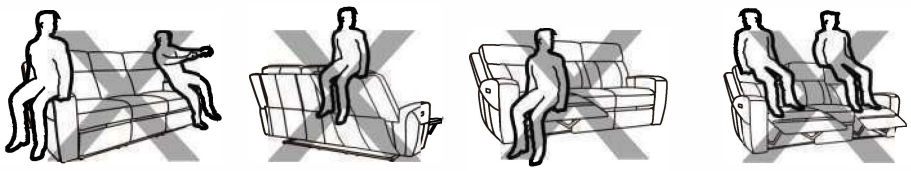

- Do not leave when the recliner is not fully closed.
- Please do not use solvents to clean the mental parts of the mechanism: a damp cloth is sufficient.
- Please do not allow children to play with the Mechanism.
- Please use the mechanism only when the person seats himself properly instead of sidewards or forwards.
- Do not touch the mechanical parts.
- Please do not continuously use the electric motor that control the reclining function of on-and-off over one minute. This action could cause the motor to cut-off due to overheating. Allow the system to cool down for 5 minutes to restore the motor to correct working order.
- Please remove the plug before cleaning the mechanism or performing other operations on it.
- Please do not drag sofa on rough or smooth surface. If the sofa needs to be moved, it must be lifted up but not pushed.

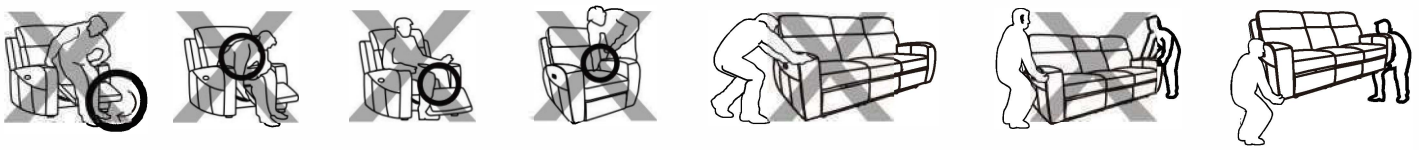

ASSEMBLY INSTRUCTIONS

BCHN: L62300700/L62301700/L62302700 NON POWER RECLINING LOVESEAT
SKU: 11416244/11416232/11416256

- The sofa requires no special but normal maintenance, so does the padding material.
- If your sofa is with fabric filler or down feather padding, you will need to shape its cushions carefully to make them restore to their original shapes, because long way transportation will make the cushions out of shape.
- In fact, the long journey which the sofa is subjected to before reaching your home could temporarily affect the sofa's initial beauty.



Before shaping



After shaping







Care and Cleaning

Dust often and use a vacuum cleaner to clean seams. To maintain the fabric appearance, gently clean soiled areas with soft cloth dampened with water. Wipe with a clean, damp surface(do not rub).

Spot Cleaning Fabric: Blot any spills immediately; do not rub. Blot away the excess liquid with a clean, dry, white cloth; turning the cloth frequently.

Do not use common household cleaners, solvents, or dry cleaning fluids on fabric furniture. These cleaners may cause damage and color fading.

Do not use or place sharp objects on upholstered furniture.

Do not place furniture in direct sunlight and keep furniture at least 60cm/2 ft from heat sources to avoid fading.

ROOMS TO GO

PROBLEM	SOLUTION
No Reclining	Check all power connections (Step 1)
Backrest Uneven	Ensure that seat back brackets are installed and locked in position (Step 1)