ASSEMBLY INSTRUCTIONS

BCHN: L62300620/L62301620/L62302620 DUAL POWER RECLINER
SKU: 11516246/11516234/11516258

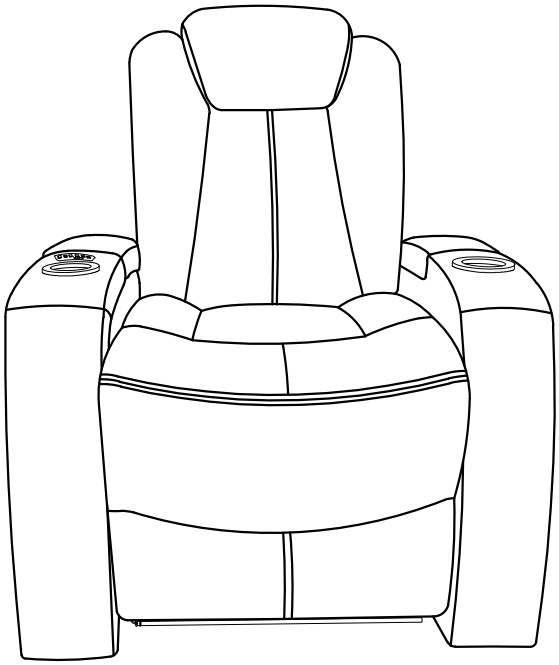

TOOLS REQUIRED: NO TOOLS REQUIRED			
PARTLIST			
NO	Description	Sketch	Quantity
A	Recliner Seat		1
B	Recliner Back		1
C	Wall Plug Transformer		1

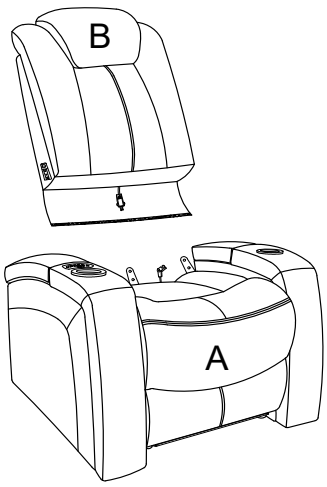

Remove the transformer (C) below which is secured with a black zip tie, then you can remove the zip tie.

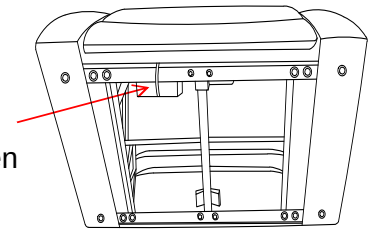

ASSEMBLY INSTRUCTIONS

BCHN: L62300620/L62301620/L62302620 DUAL POWER RECLINER
SKU: 11516246/11516234/11516258

Step 1

Install the Backrest (B) into the Seat (A) by positioning the female metal receiver brackets over the male metal posts. Ensure that female metal receiver brackets on each side of the backrest are positioned over the seat metal posts, push down the female brackets over the male posts simultaneously until each side is locked into place with an audile "click" is heard.

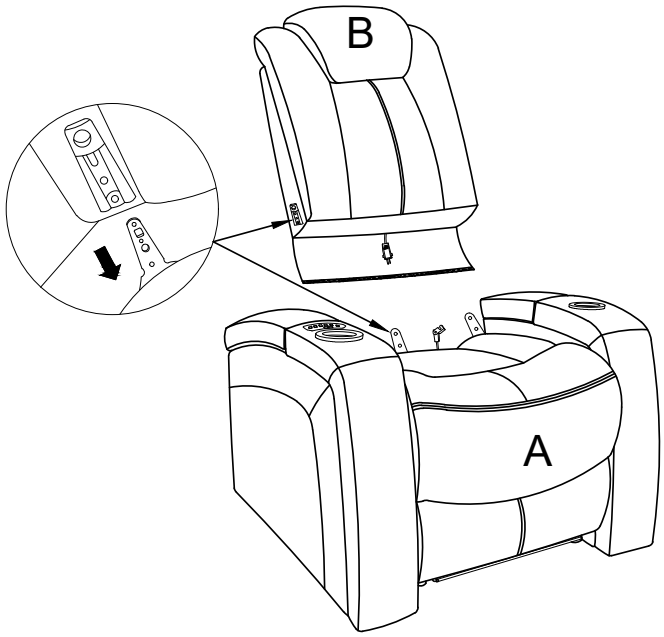

Step 2

connect the power Backrest (B) lead wires located at the bottom of backrest to the matching lead wires found at the rear of seat as seen below. Be sure to close the clip locks to prevent the connections from coming loose during use.

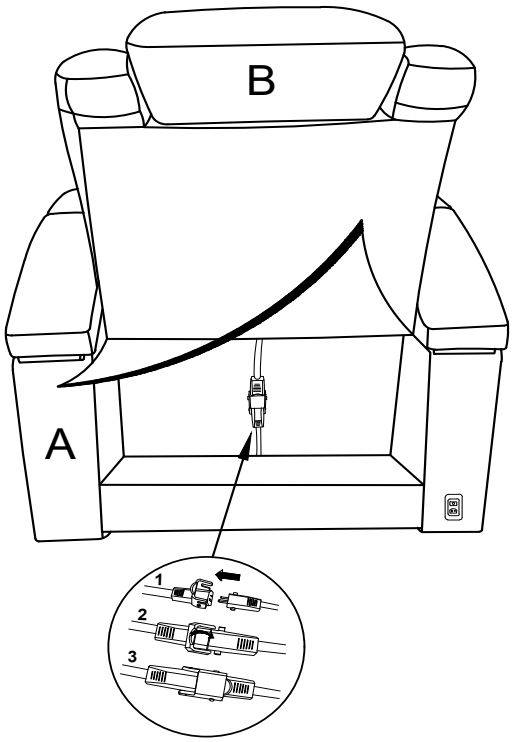

ASSEMBLY INSTRUCTIONS

BCHN: L62300620/L62301620/L62302620 DUAL POWER RECLINER
SKU: 11516246/11516234/11516258

IMPORTANT SAFETY INSTRUCTIONS

WARNING

Misuse can result in FIRE or DEATH by ELECTRICAL SHOCK

29VDC/2.0A
DEWERTOKIN TECHNOLOGY GROUP CO., LTD.
JLDP.10.078.221

Read all instructions before using this furnishing.

DANGER – To reduce the risk of electric shock:

- Always unplug this furnishing from the electrical outlet before cleaning or servicing.

WARNING – To reduce the risk of burns, fire, electric shock, or injury to persons:

- Unplug from outlet before putting on or taking off parts.
- Never operate this furnishing if it has a damaged electrical cord or plug, if it is not working properly, or if the electrical cord or plug has been damaged or dropped into water. Stop using this furnishing and call a service center for examination and repair.
- Keep the electrical cord and plug away from heated surfaces and other heat sources.
- To disconnect, turn all controls to the off position, then remove plug from outlet.
- When operating, ensure that electrical cord is not under the base, legs, or motion mechanism to avoid damage to electrical cord or plug.
- Do not strain or stretch electrical cord.
- Do not use extension cords or power strips.
- Keep out of reach of children. This is not a toy.
- Plug direcly into a compatible electrical socket.
- Do not modify the plug or use any adapters.

INSTRUCCIONES DE SEGURIDAD IMPORANTES

WARNING

El mal uso puede provocar INCENDIO o MUERTE por DESCARGA ELÉCTRICA

29VDC/2.0A
DEWERTOKIN TECHNOLOGY GROUP CO., LTD.
JLDP.10.078.221

Leer todas las instrucciones antes de usar este mobiliario.

PELIGRO – Para reducir el riesgo de descarga electrica:

- Siempre desenchufe este accesorio de la toma de corriente eléctrica antes de limpiarlo o repararlo.

ADVERTENCIA: para reducir el riesgo de quemaduras, incendios, descargas eléctricas o lesiones a personas:

- Desenchufe del tomacorriente antes de colocar o quitar partes.
- Nunca opere este accesorio si tiene un cable o enchufe eléctrico dañado, si no funciona correctamente, o si el cable o el enchufe eléctrico se ha dañado o se ha caído al agua. Deje de usar este equipamiento y llame a un centro de servicio para que lo examinen y lo reparen.
- Mantenga el cable eléctrico y el enchufe lejos de superficies calientes y otras fuentes de calor.
- Para desconectar, gire todos los controles a la posición de apagado, luego retire el enchufe del tomacorriente.
- Al operar, asegúrese de que el cable eléctrico no esté debajo de la base, las patas o el mecanismo de movimiento para evitar dañar el cable eléctrico o el enchufe.
- No fuerce ni estire el cable eléctrico.
- No utilizar cables de extensión o tomas de corriente.
- Mantener fuera del alcance de los niños. Esto no es un juguete
- Enchúfelo directamente a una toma de corriente compatible.
- No modifique el enchufe ni utilice adaptadores.

POWER CONNECTIONS AND POWER SWITCH

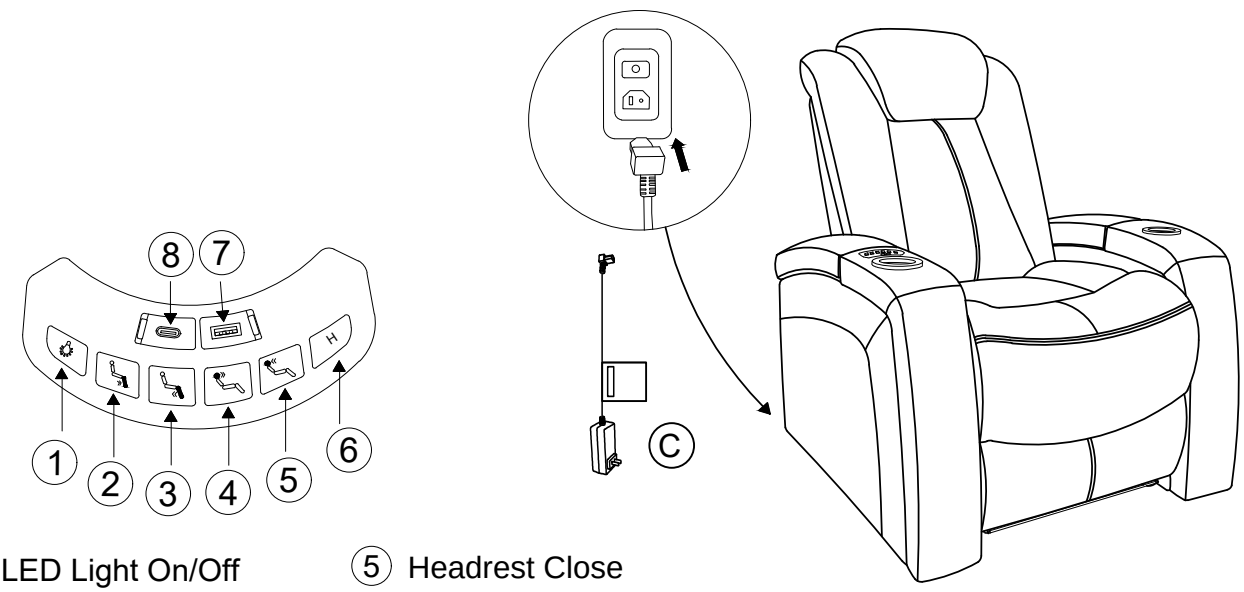

1. LED Light On/Off
2. Mechanism Open
3. Mechanism Close
4. Headrest Open
5. Headrest Close
6. Home Button-Close All
7. USB interface
8. USB -C interface

ASSEMBLY INSTRUCTIONS

BCHN: L62300620/L62301620/L62302620 DUAL POWER RECLINER
SKU: 11516246/11516234/11516258

Step 3: Connect power cord to DC socket adaptor

Power Cord to DC Socket Adaptor

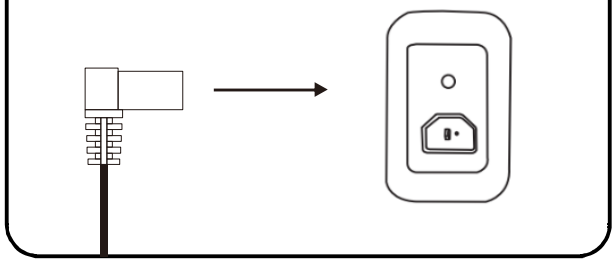

Step 4: Connect power cord to Electrical Wall Outlet

Power Cord to Electrical Outlet

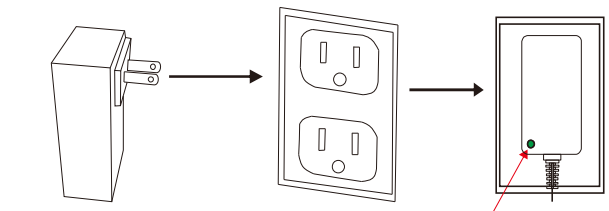

Step 5 : After all connections have been made, ensure the LED light is lit on after the transfomer is power on.

DC Socket Adaptor

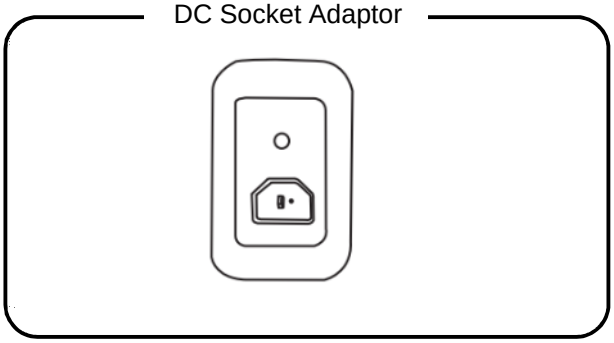

- Please keep the sofa at least 20″ away from heat producers, such as heating equipment and radiator.
- Please avoid placing the sofa under strong sun or strong lamplight to remain its original color.
- Maintain minimum of 6″ space between the furniture backs and wall.

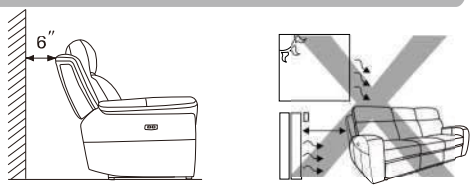

The frame inside your sofa will always remain intact and strong over time, providing you comply with the following recommendations:

- Avoid jumping on the sofa and do not throw yourself violently onto the sofa.
- Do not sit on the arms and/or the Back.
- Do not sit on the footrest when mechanism is open.

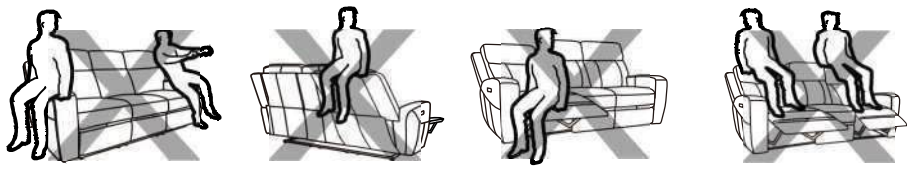

- Do not leave when the recliner is not fully closed.
- Please do not use solvents to clean the mental parts of the mechanism: a damp cloth is sufficient.
- Please do not allow children to play with the Mechanism.
- Please use the mechanism only when the person seats himself properly instead of sidewards or forwards.
- Do not touch the mechanical parts.
- Please do not continuously use the electric motor that control the reclining function of on-and-off over one minute. This action could cause the motor to cut-off due to overheating. Allow the system to cool down for 5 minutes to restore the motor to correct working order.
- Please remove the plug before cleaning the mechanism or performing other operations on it.
- Please do not drag sofa on rough or smooth surface. If the sofa needs to be moved, it must be lifted up but not pushed.

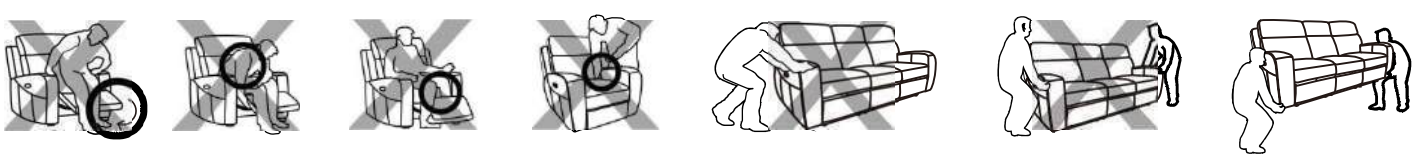

ASSEMBLY INSTRUCTIONS

BCHN: L62300620/L62301620/L62302620 DUAL POWER RECLINER
SKU: 11516246/11516234/11516258

- The sofa requires no special but normal maintenance, so does the padding material.
- If your sofa is with fabric filler or down feather padding, you will need to shape its cushions carefully to make them restore to their original shapes, because long way transportation will make the cushions out of shape.
- In fact, the long journey which the sofa is subjected to before reaching your home could temporarily affect the sofa's initial beauty.



Before shaping



After shaping



Care and Cleaning

Dust often and use a vacuum cleaner to clean seams. To maintain the fabric appearance, gently clean soiled areas with soft cloth dampened with water. Wipe with a clean, damp surface(do not rub).

Spot Cleaning Fabric: Blot any spills immediately; do not rub. Blot away the excess liquid with a clean, dry, white cloth; turning the cloth frequently.

Do not use common household cleaners, solvents, or dry cleaning fluids on fabric furniture. These cleaners may cause damage and color fading.

Do not use or place sharp objects on upholstered furniture.

Do not place furniture in direct sunlight and keep furniture at least 60cm/2 ft from heat sources to avoid fading.

ROOMS TO GO

PROBLEM	SOLUTION
No Power	Check all power connections (Step 3,4,5)
No Reclining	Check all power connections (Step 3,4,5)
Backrest Uneven	Ensure that seat back brackets are installed and locked in position (Step 1)

This porduct is manufactured by BCHN for ROOMS TO GO

Version 1; 04/2026