Manufactured By MAAH for Rooms To Go

Assembly Instructions

MAAH RU71397M DUAL POWER RECLINER

SKU: 17971385/17971397

Version 1.0 05/2026

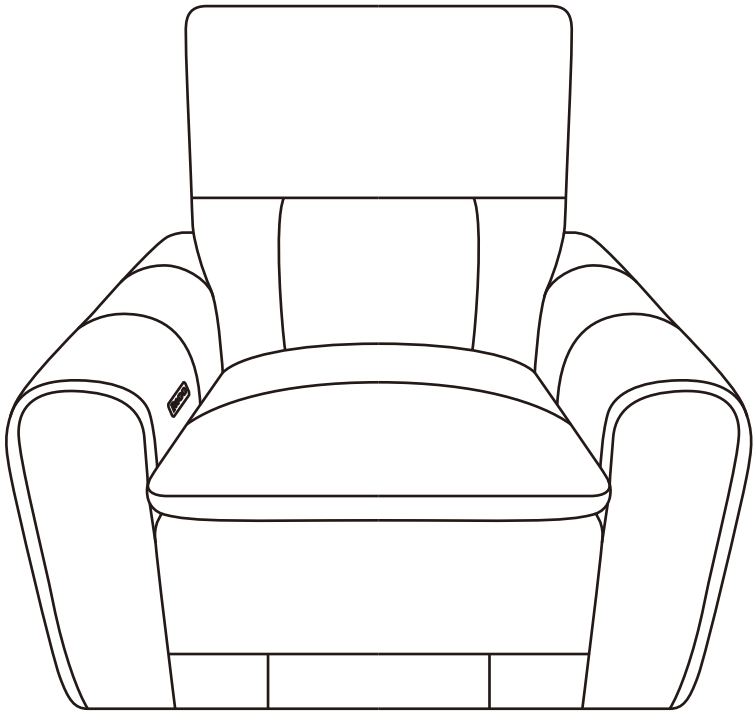

LIST OF PARTS

TOOLS REQUIRED:NO TOOLS REQUIRED			
PART LIST			
NO	Description	Item	Quantity
A	Backrest	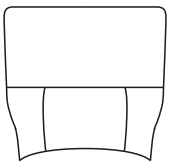	1
B	Seat	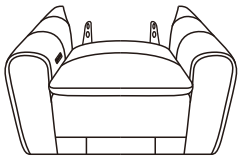	1
C	wall plug transformer	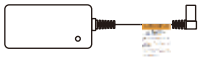	1

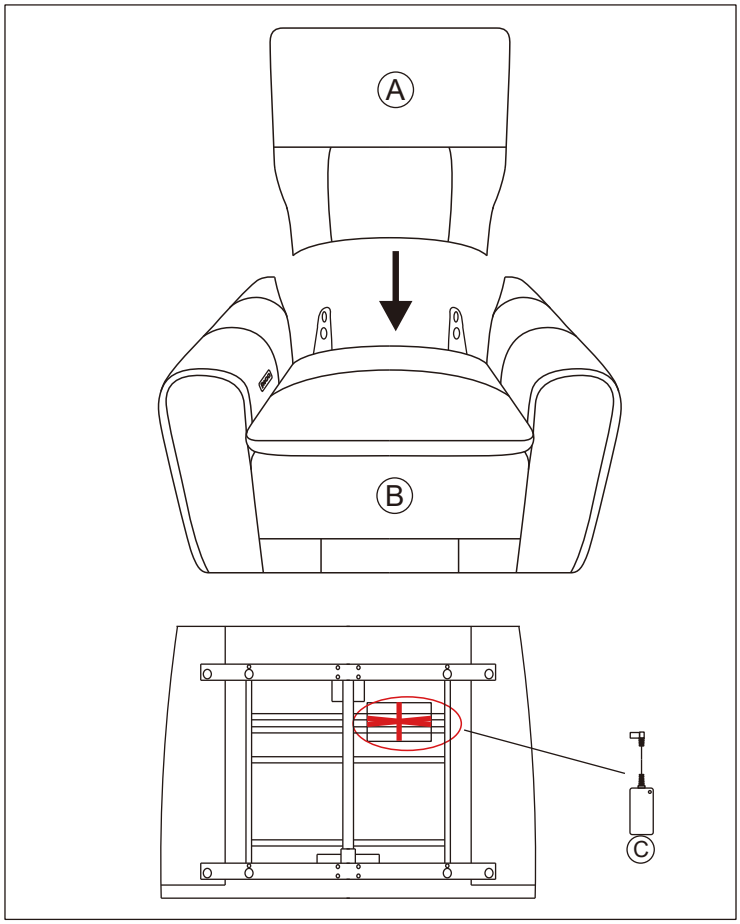

ASSEMBLY INSTRUCTIONS

STEP 1:

Install the Backrest (A) into the Seat (B) by positioning the female metal receiver brackets over the male metal posts. Ensure that female metal receiver brackets on each side of the backrest are positioned over the seat metal posts.
Push down the female brackets over male posts simultaneously until each side is locked into place an audile “click” is heard. Install all backrests of sectional pieces in the same way described above.

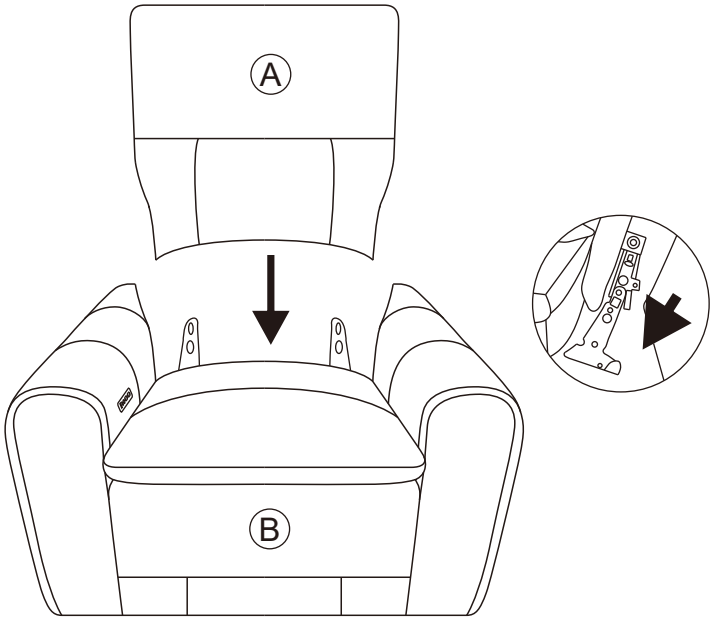

POWER CONNECTIONS

STEP 2:

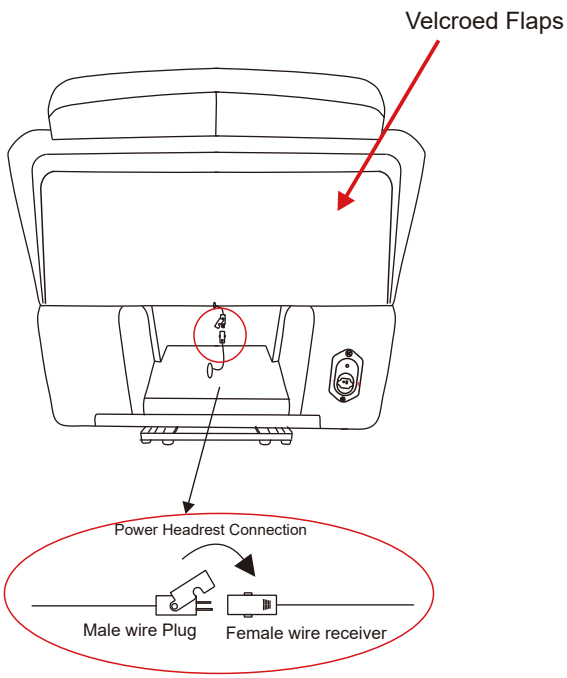

Lift velcroed flap located at the bottom back of the recliner chairs.
Latch male wire plug from backrest (headrest motor wire) to female wire receiver located in the back bottom of the recliner underneath the flap.
This instruction is applicable to all power recliners (Left Arm , Right Arm and Armless recliners.)

POWER CONNECTIONS

STEP 3: Connect wall plug transformer to DC adaptor.

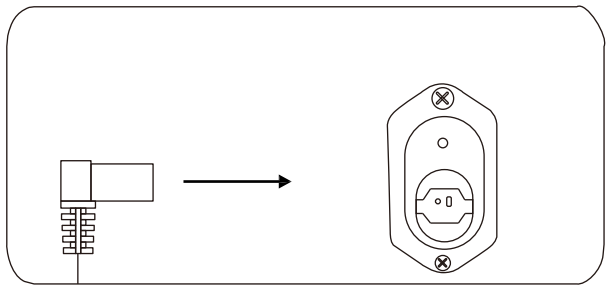

STEP 4: Connect wall plug transformer to outlet.

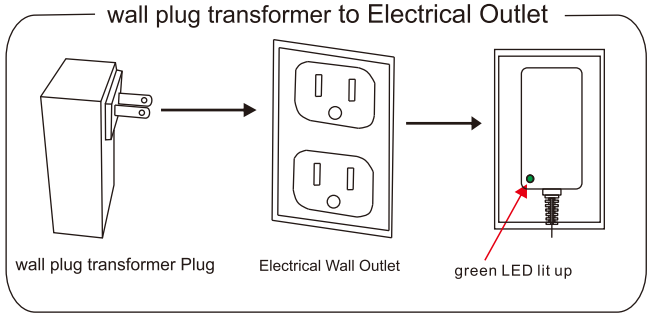

STEP 5: After all connections have been made, ensure that LED light is lit on.

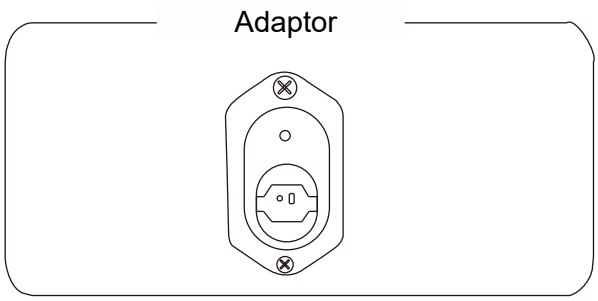

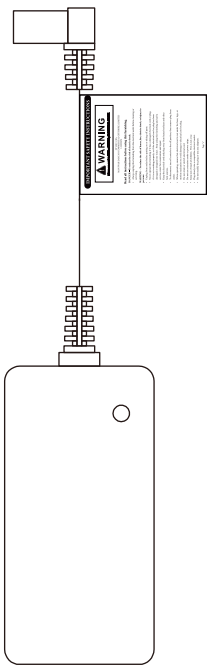

ENGLISH

IMPORTANT SAFETY INSTRUCTIONS

⚠ WARNING

Misuse can result in FIRE or DEATH by ELECTRICAL SHOCK

29 VDC/ 2.0A
MAN WAH (MACAO COMMERCIAL OFFSHORE) LIMITED
141600654

Read all instructions before using this furnishing.

DANGER – To reduce the risk of electric shock:

- Always unplug this furnishing from the electrical outlet before cleaning or servicing.

WARNING – To reduce the risk of burns, fire, electric shock, or injury to persons:

- Unplug from outlet before putting on or taking off parts.
- Never operate this furnishing if it has a damaged electrical cord or plug, if it is not working properly, or if the electrical cord or plug has been damaged or dropped into water. Stop using this furnishing and call a service center for examination and repair.
- Keep the electrical cord and plug away from heated surfaces and other heat sources.
- To disconnect, turn all controls to the off position, then remove plug from outlet.
- When operating, ensure that electrical cord is not under the base, legs, or motion mechanism to avoid damage to electrical cord or plug.
- Do not strain or stretch electrical cord.
- Do not use extension cords or power strips.
- Keep out of reach of children. This is not a toy.
- Plug direcly into a compatible electrical socket.
- Do not modify the plug or use any adapters.

SPANISH

INSTRUCCIONES DE SEGURIDAD IMPORANTES

⚠ WARNING

El mal uso puede provocar INCENDIO o MUERTE por DESCARGA ELÉCTRICA

29 VDC/ 2.0A
MAN WAH (MACAO COMMERCIAL OFFSHORE) LIMITED
141600654

Leer todas las instrucciones antes de usar este mobiliario.

PELIGRO – Para reducir el riesgo de descarga electrica:

- Siempre desenchufe este accesorio de la toma de corriente eléctrica antes de limpiarlo o repararlo.

ADVERTENCIA: para reducir el riesgo de quemaduras, incendios, descargas eléctricas o lesiones a personas:

- Desenchufe del tomacorriente antes de colocar o quitar partes.
- Nunca opere este accesorio si tiene un cable o enchufe eléctrico dañado, si no funciona correctamente, o si el cable o el enchufe eléctrico se ha dañado o se ha caído al agua. Deje de usar este equipamiento y llame a un centro de servicio para que lo examinen y lo reparen.
- Mantenga el cable eléctrico y el enchufe lejos de superficies calientes y otras fuentes de calor.
- Para desconectar, gire todos los controles a la posición de apagado, luego retire el enchufe del tomacorriente.
- Al operar, asegúrese de que el cable eléctrico no esté debajo de la base, las patas o el mecanismo de movimiento para evitar dañar el cable eléctrico o el enchufe.
- No fuerce ni estire el cable eléctrico.
- No utilizar cables de extensión o tomas de corriente.
- Mantener fuera del alcance de los niños. Esto no es un juguete
- Enchúfelo directamente a una toma de corriente compatible.
- No modifique el enchufe ni utilice adaptadores.

ELECTRICAL CONTROLS

STEP 6:

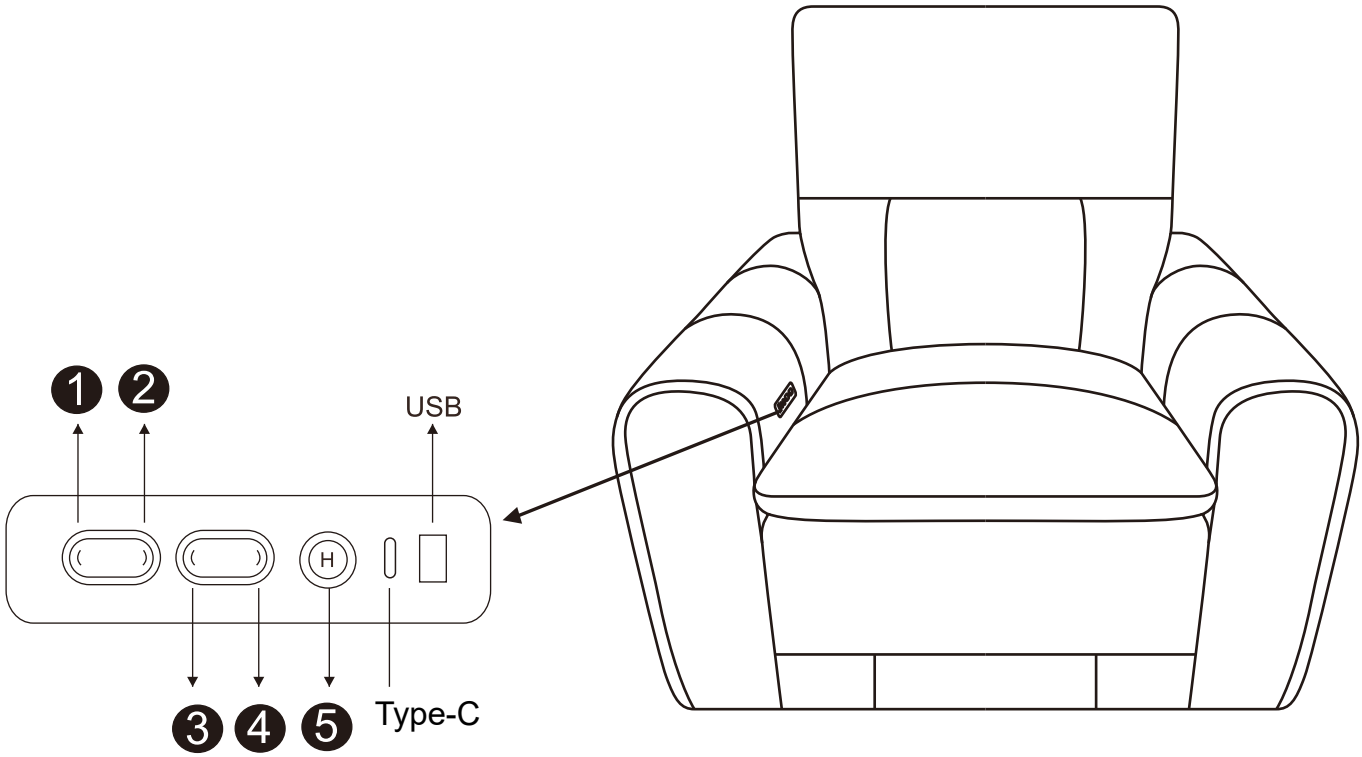

1.Press button ❶ Headrest close

2.Press button ❷ Headrest Open

3.Press button ❸ Reclining/ Headrest close

4.Press button ❹ Click: Reclining Open
Double Click: Zero Gravity position (seat open to 120º)

5.Press button ❺ Home button returns both footrest and headrest to the original upright/closed position.

WARNINGS

*Clearance to the wall 30 cm

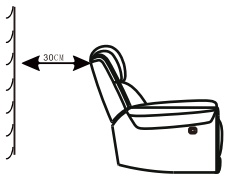

*Avoid placing unit in areas where unit can be exposed to direct sunlight other powerful light sources,
*Keep unit at least 24" from all heat sources.

as fading or discoloration may occur.

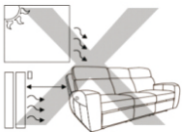

*Do not reach under seat when mechanism is operating or serious injury may occur.
*Reclining mechanism should only be operated while seated properly.



Do not sit on arms or backrest
Do not jump or roughhouse on furniture

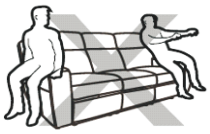

*If unit must be moved, do not drag. Unit must be lifted in order to be moved.



*Do not continuously operate mechanism for more than one minute or unit may go into protection mode by shutting down to prevent overheating.
*Unplug unit from power source prior to cleaning mechanism.
*Do not allow electrical components to come into contact with any liquids.

CARE AND CLEANING

*Upholstered furniture is packaged tightly to protect it during transit. This packaging can sometimes cause creases or misshaped cushions when the furniture comes out of the packaging. These issues will correct themselves over time as the fibers of the cushions are exposed to air.However, shaping the cushions with your hands can alleviate the creases and compressed fibers more quickly.

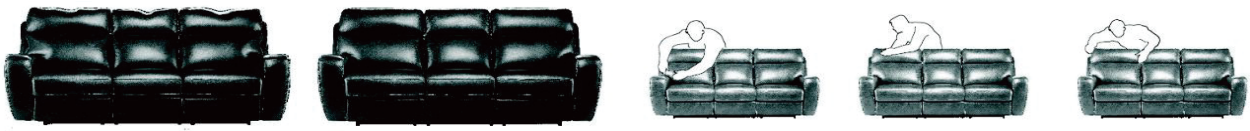

Before shaping After shaping

*Dust often and use a vacuum cleaner to remove debris from seams and crevasses.
*Use a soft damp cloth to gently clean soiled areas and wipe clean. Do not rub.
*Do not use household cleaners or solvents. Such cleaners may cause damage and/or discoloration.
*Do regularly use dedicated leather care product onto the leather furniture to prevent built up of body oils.

TROUBLE SHOOTING

PROBLEM	SOLUTION
Not Reclining	Check all power connections Step 3, 4, 5
USB not working	Check all power connections Step 3. 4, 5