Assembly Instructions

DHAR SRRTG252696 COCKTAIL TABLE SKU# 22026961

Version 01 – Date created: 2026/03/09

Manufactured by DHAR for Rooms To Go

Step	Code	Parts List	Q'TY
1	A	GLASS 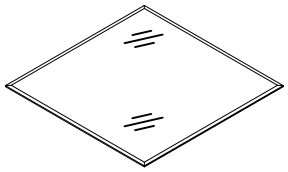	1PC
1	B	FRAME 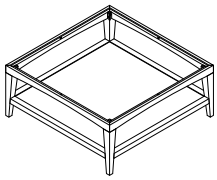	1PC

1. We recommend that you should assemble this product with the assistance of another person; this will make assembly easier and will eliminate damage to the product or injury to persons during assembly.
2. Please do not over tighten screws or bolts until assembly is complete.
3. Please put all parts on a non-abrasive floor before assembly, and follow assembly steps to assemble your newly purchased product correctly and efficiently.

Completed

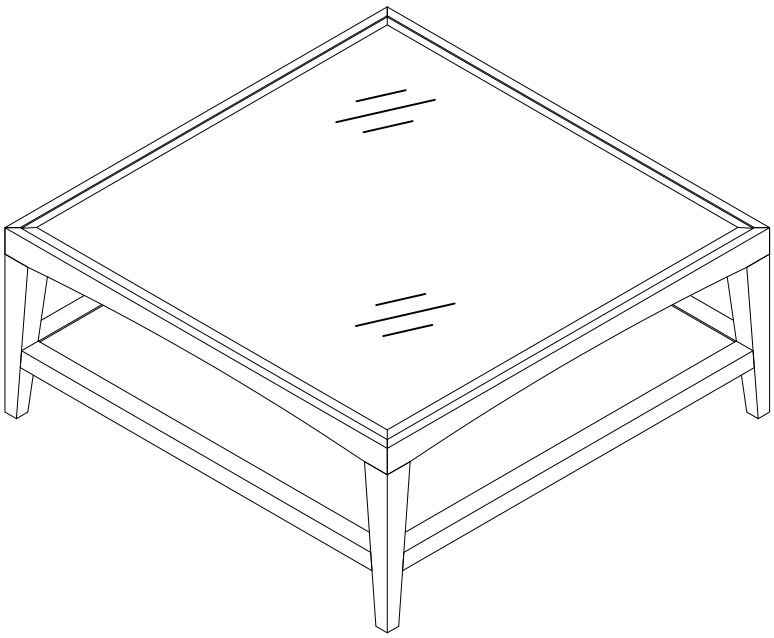

Hardware Pack Location(s): DHAR SRRTG252696 COCKTAIL TABLE SKU#22026961

Assembly Instructions

DHAR SRRTG252696 COCKTAIL TABLE SKU# 22026961

Manufactured by DHAR for Rooms To Go

Version 01 – Date created: 2026/03/09

*** Caution: Please read all instructions carefully before starting the assembly process. These parts are cumbersome and heavy. Therefore, two people are recommended in order to prevent personal injury and ensure the parts are not damaged during the assembly.

STEP 1:

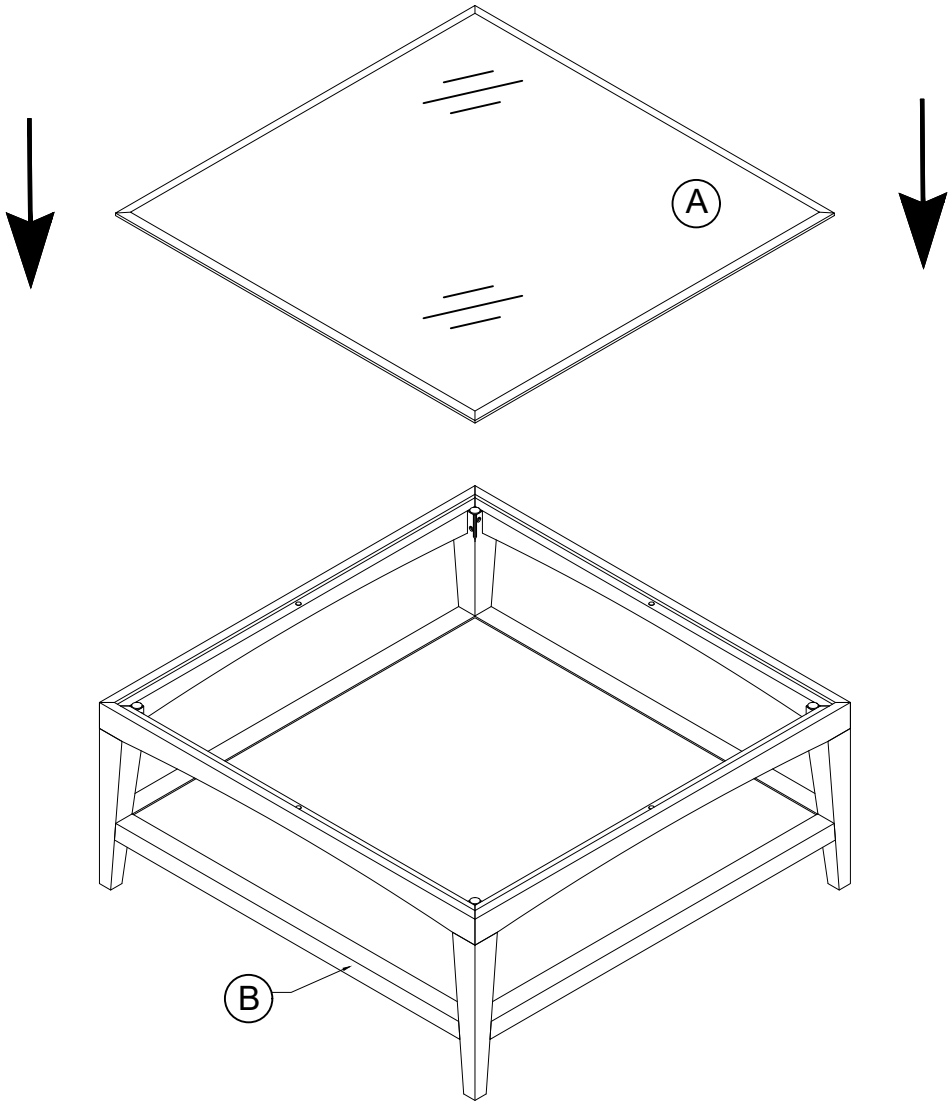

Hardware Pack Location(s): DHAR SRRTG252696 COCKTAIL TABLE SKU#22026961

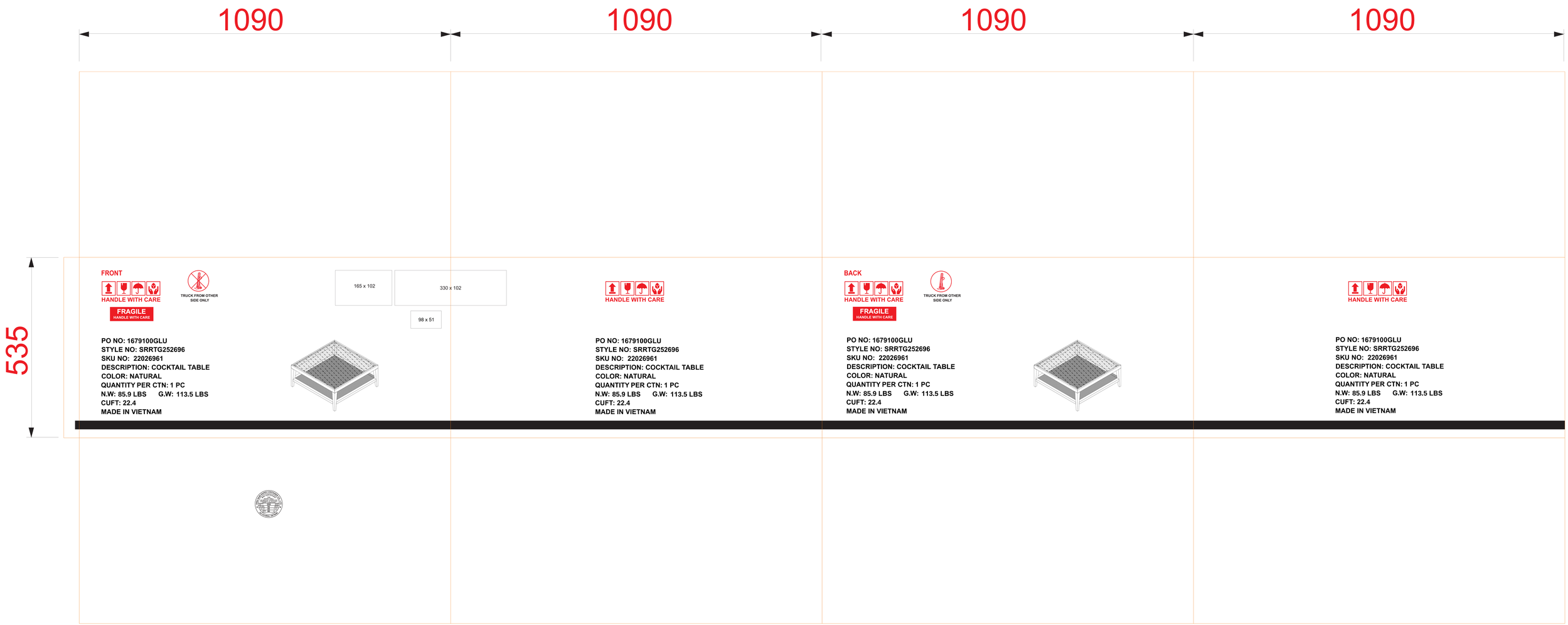

PO NO: 1679100GLU
STYLE NO: SRRTG252696
SKU NO: 22026961
DESCRIPTION: COCKTAIL TABLE
COLOR: NATURAL
QUANTITY PER CTN: 1 PC
N.W: 85.9 LBS G.W: 113.5 LBS
CUFT: 22.4
MADE IN VIETNAM

FRONT

HANDLE WITH CARE

FRAGILE
HANDLE WITH CARE

165 x 102

330 x 102

98 x 51

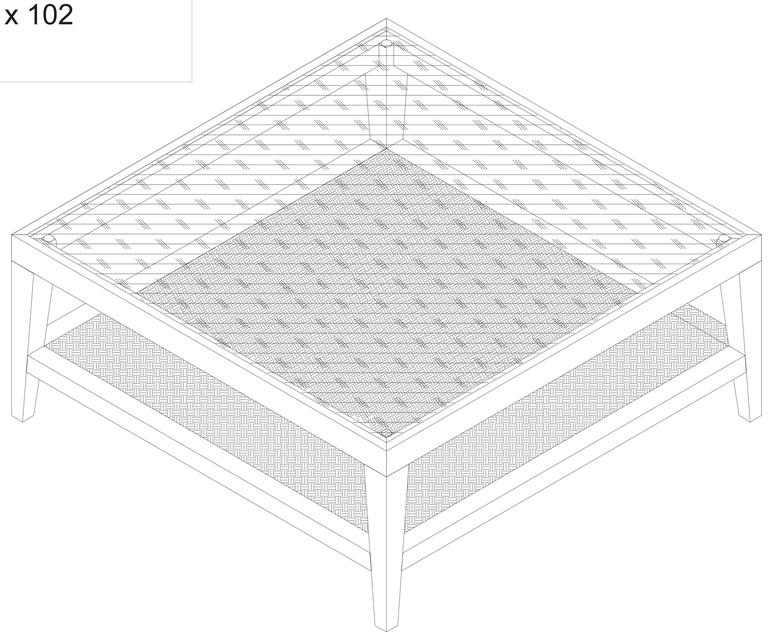

BACK

DINH NAM PAPER CONTAINER CO., LTD
BOX CERTIFICATE
THIS DOUBLE WALL BOX MEETS ALL CONSTRUCTION REQUIREMENTS OF APPLICABLE FREIGHT CLASSIFICATION

BURSTING TEST	200	LBS PER SQ INCH
MIN COMB WT FACINGS	92	LBS PER M SQ FT
SIZE LIMIT	85	INCHES
GROSS WT. LT	80	LBS

HO CHI MINH, VIETNAM

TRUCK FROM OTHER SIDE ONLY

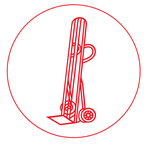

TRUCK FROM THIS SIDE ONLY

Assembly Instructions

DHAR SRRTG252696B END TABLE SKU# 23026962

Version 01 – Date created: 2026/03/09

Manufactured by DHAR for Rooms To Go

Step	Code	Parts List	Q'TY
1	A	GLASS 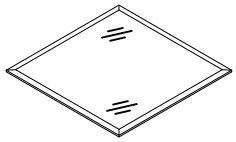	1PC
1	B	FRAME 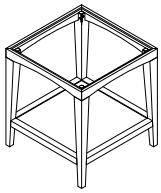	1PC

1. We recommend that you should assemble this product with the assistance of another person; this will make assembly easier and will eliminate damage to the product or injury to persons during assembly.
2. Please do not over tighten screws or bolts until assembly is complete.
3. Please put all parts on a non-abrasive floor before assembly, and follow assembly steps to assemble your newly purchased product correctly and efficiently.

Completed

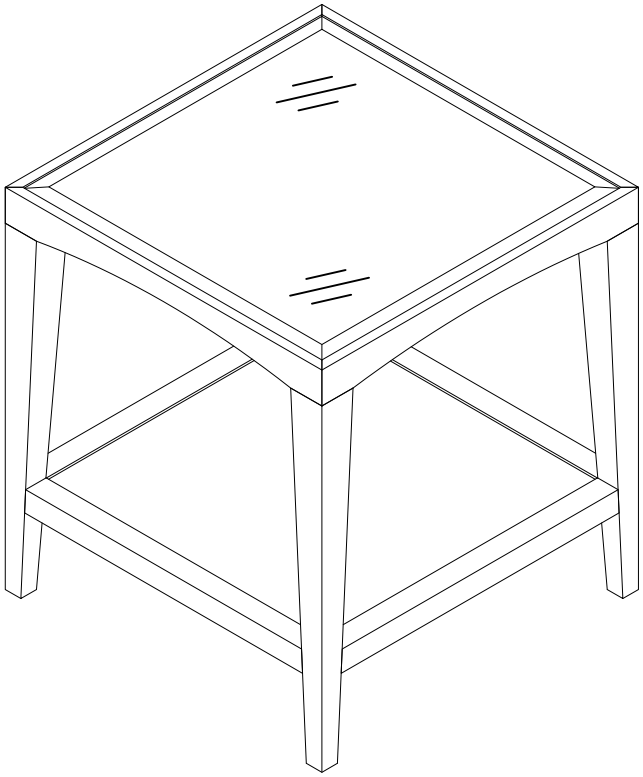

Hardware Pack Location(s): DHAR SRRTG252696B END TABLE SKU#23026962

Assembly Instructions

DHAR SRRTG252696B END TABLE SKU# 23026962

Version 01 – Date created: 2026/03/09

Manufactured by DHAR for Rooms To Go

*** Caution: Please read all instructions carefully before starting the assembly process. These parts are cumbersome and heavy. Therefore, two people are recommended in order to prevent personal injury and ensure the parts are not damaged during the assembly.

STEP 1:

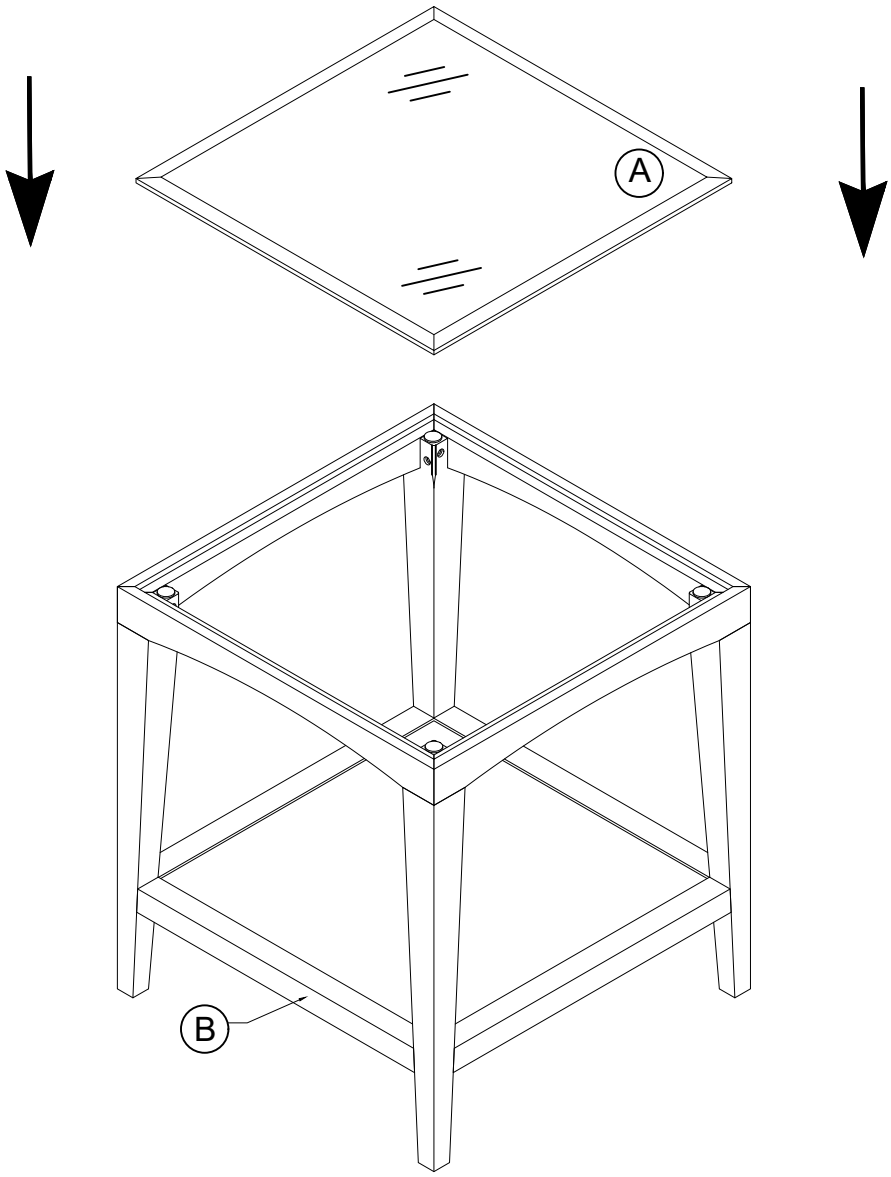

Hardware Pack Location(s): DHAR SRRTG252696B END TABLE SKU#23026962

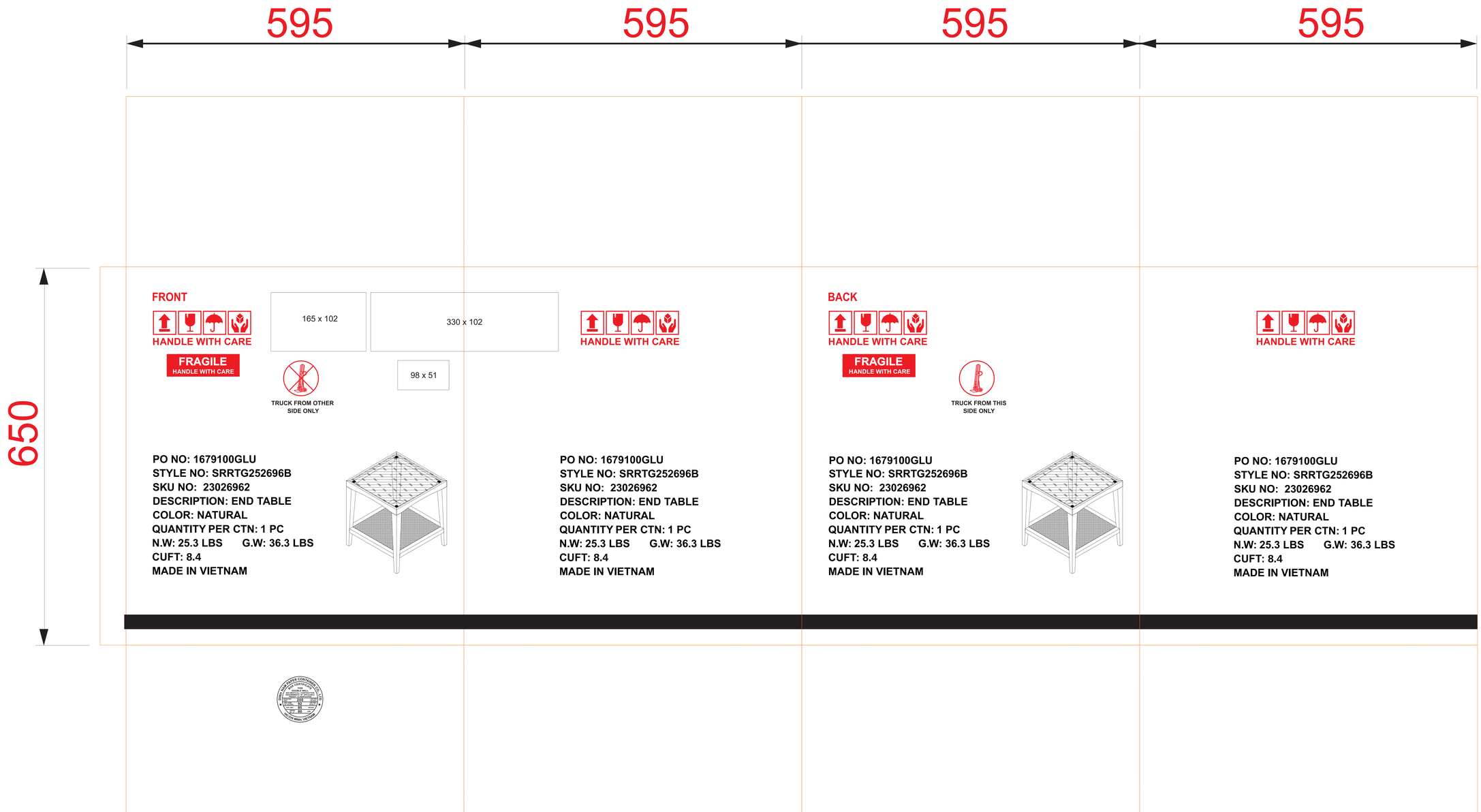

PO NO: 1679100GLU
STYLE NO: SRRTG252696B
SKU NO: 23026962
DESCRIPTION: END TABLE
COLOR: NATURAL
QUANTITY PER CTN: 1 PC
N.W: 25.3 LBS G.W: 36.3 LBS
CUFT: 8.4
MADE IN VIETNAM

FRONT

HANDLE WITH CARE

FRAGILE
HANDLE WITH CARE

165 x 102

330 x 102

98 x 51

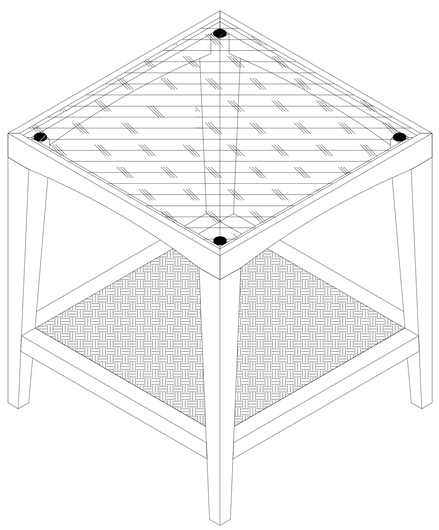

BACK

TRUCK FROM OTHER SIDE ONLY

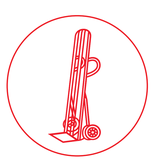

TRUCK FROM THIS SIDE ONLY