ALEK 003-30 COCKTAIL TABLE W/ SHELF
SKU#:22100349
ASSEMBLY INSTRUCTION

Manufactured by ALEK for Rooms To Go

Thank you for purchasing this quality product. Be sure to check all packing materia carefully for small parts which may have come loose inside the carton during shipment. Identify and count all parts and compare with the Parts list below:

NO.	PART	DESCRIPTION	Q'TY	NO.	PART	DESCRIPTION	Q'TY
A		Bolt:Ø1/4"x2" (19 Threads per inch.)	8	C		ALLEN WRENCH:4mm	1
B		Bolt:Ø1/4"x5/8" (19 Threads per inch.)	4				

STEP 2:

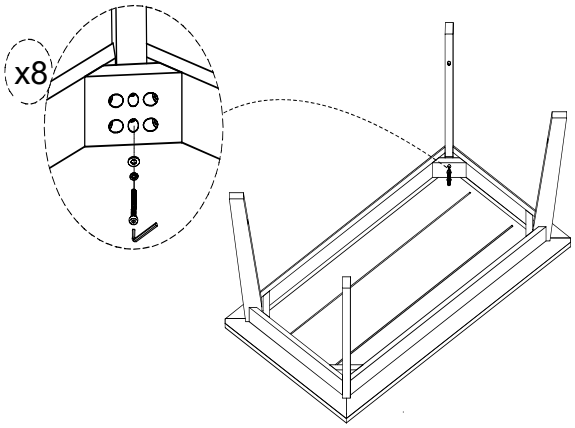

STEP 1:

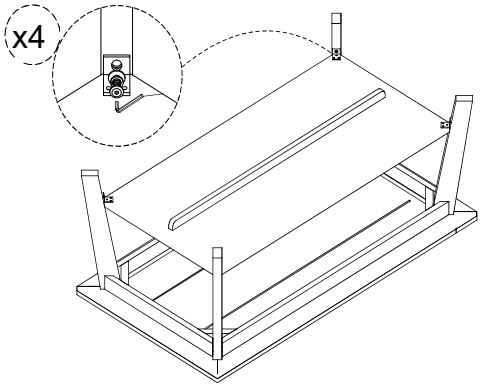

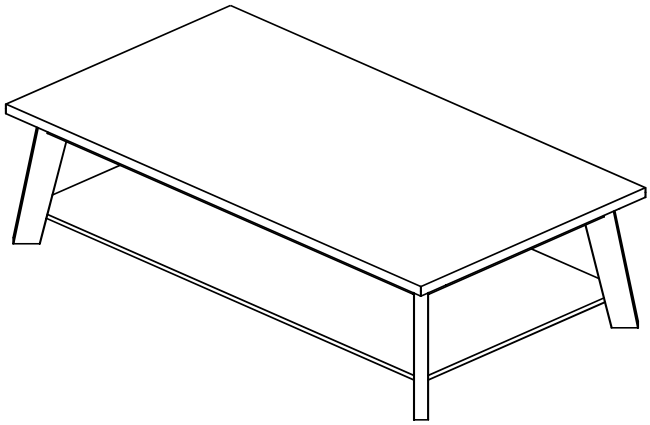

ASSEMBLY INSTRUCTION

1) Carefully unwrap the furniture and place all parts on a clean soft blanket
2) place the table top frame upside down as shown in Step 1
3) Using A.C,attach each leg to the top frame, but do not tighten 100%
4) Using B.C,attach each leg to the shelf, but do not tighten 100%
5) Tighten the legs, top frame and shelf 100%
6) Enjoy your table for a long time to come

MADE IN VIETNAM