ASSEMBLY INSTRUCTIONS

MNFD IMPA381 80" CREDENZA - SKU # 25173701, 26003816
MNFD IMPA381C 80" CREDENZA - SKU # 25173713, 26039619
MNFD IMPA381N 80" CREDENZA - SKU # 25173725, 26073724
MNFD IMPA381W 80" CREDENZA - SKU # 25173737, 26073736

Manufactured by MNFD for Rooms To Go

Version 1.0 4-29-2025

THANK YOU FOR PURCHASING THIS QUALITY PRODUCT. BE SURE TO CHECK ALL PACKING MATERIALS CAREFULLY FOR SMALL HARDWARE WHICH MAY HAVE COME LOOSE INSIDE THE CARTON DURING SHIPMENT. IDENTIFY AND COUNT ALL HARDWARE AND COMPARE WITH THE HARDWARE LIST BELOW.

PARTS LIST			
NO.	Description	Sketch	Q' TY
A	Palisades 80" Credenza	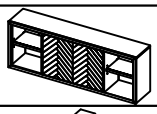	1 pc.
B	Legs		4 pcs.
C	Center Leg		1 pc.
D	Handle		2 pcs.

Tool required (not provided)

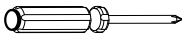 Phillips Head Screwdriver

HARDWARE			
NO.	Description	Sketch	Q' TY
1	Furniture Tipping Restraint		1set
2	Bolt M6*1.0*57mm	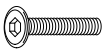	8 pcs.
3	Lock washers Ø1/4"*13mm		8 pcs.
4	Plain washers Ø1/4"*19mm		8 pcs.
5	Allen key 4*59*25mm		1 pc.
6	Screw Ø5/32"*28*1"		4 pcs.

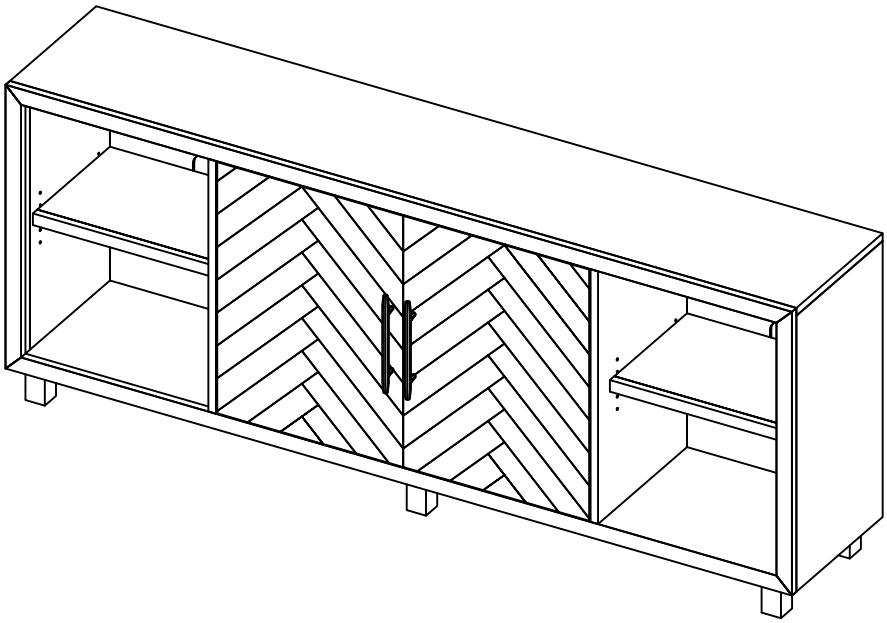

Hardware Pack Location:
MNFD IMPA381 80" CREDENZA - SKU # 25173701, 26003816
MNFD IMPA381C 80" CREDENZA - SKU # 25173713, 26039619
MNFD IMPA381N 80" CREDENZA - SKU # 25173725, 26073724
MNFD IMPA381W 80" CREDENZA - SKU # 25173737, 26073736

MADE IN VIET NAM

ASSEMBLY INSTRUCTIONS

MNFD IMPA381 80" CREDENZA - SKU # 25173701, 26003816
MNFD IMPA381C 80" CREDENZA - SKU # 25173713, 26039619
MNFD IMPA381N 80" CREDENZA - SKU # 25173725, 26073724
MNFD IMPA381W 80" CREDENZA - SKU # 25173737, 26073736

Manufactured by MNFD for Rooms To Go

Version 1.0 4-29-2025

Step 1:

Lay cabinet on its back panel on a smooth and clean surface as shown. Install Legs (B) at each corner of the cabinet (A) and secure in place using a bolt (2) with lock washers (3) and plain washers (4) and use allen key (5) to tighten bolts, adjust leveler if needed.

Step 2:

Install center leg (C) and adjust leveler if needed.

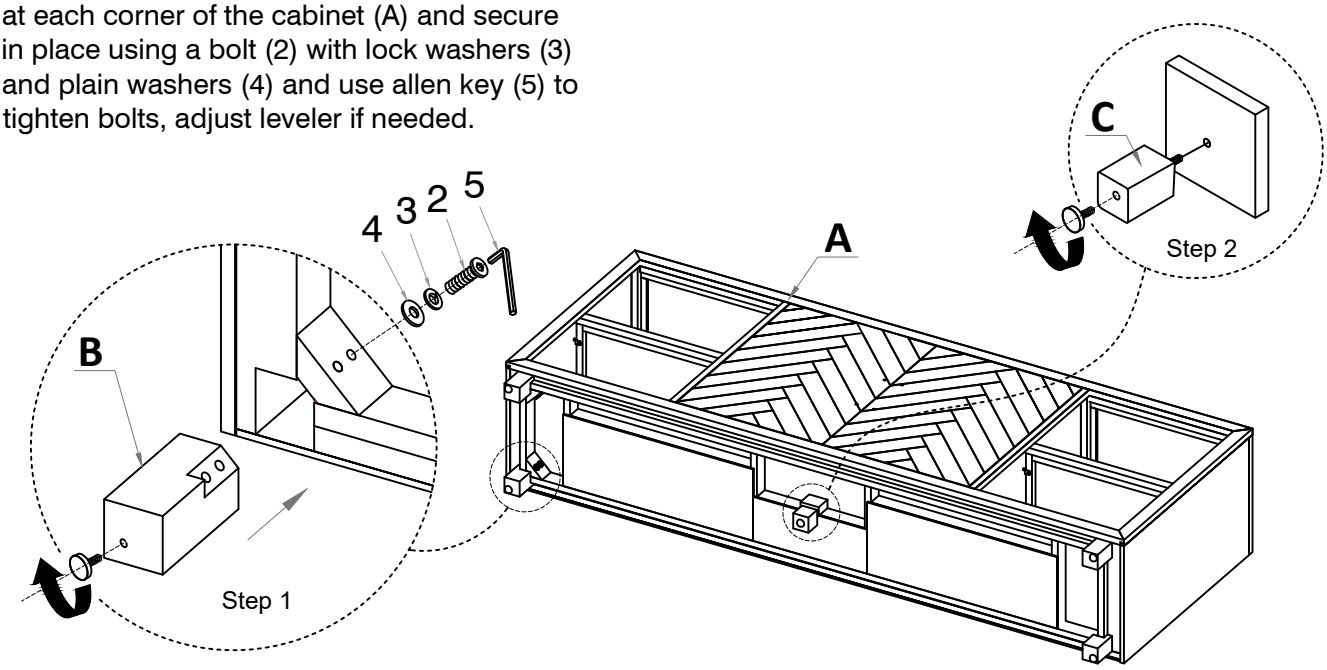

Step 3:

Turn the console upright. Install handles (D) on the doors using a screw (6).

Step 4:

Shelves are secured in place with screws through a metal shelf pin for packing and shipping. In order to adjust the shelf remove the screw with Phillips head screwdriver (not included) and reposition to desired height.

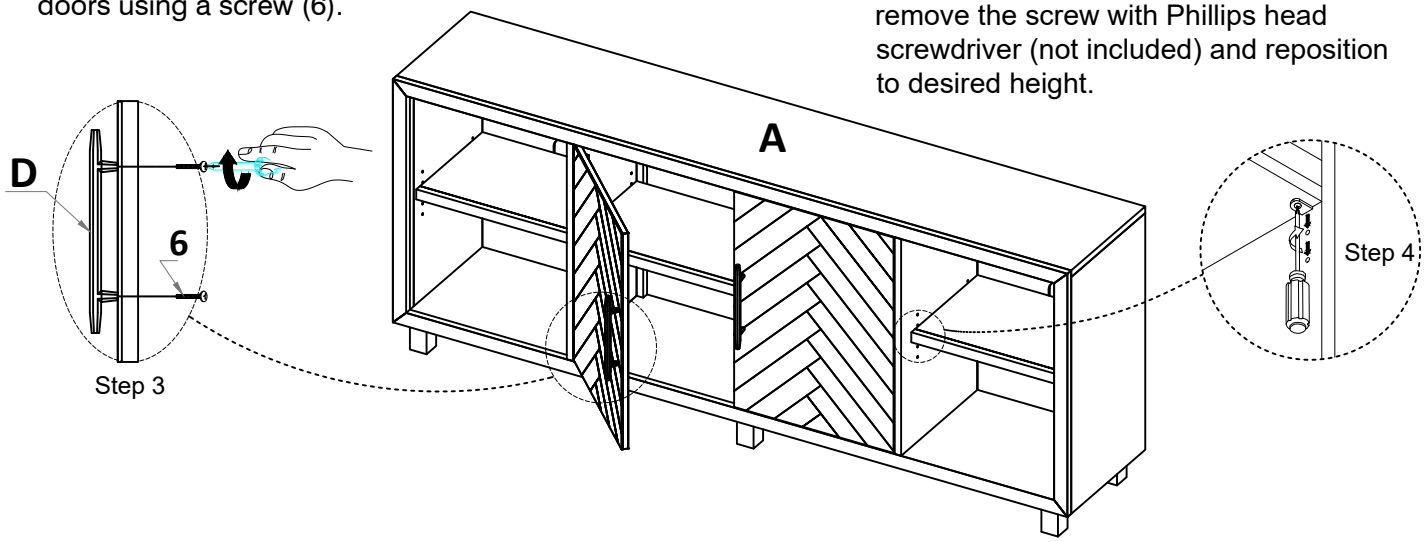

Hardware Pack Location:

MNFD IMPA381 80" CREDENZA - SKU # 25173701, 26003816
MNFD IMPA381C 80" CREDENZA - SKU # 25173713, 26039619
MNFD IMPA381N 80" CREDENZA - SKU # 25173725, 26073724
MNFD IMPA381W 80" CREDENZA - SKU # 25173737, 26073736

MADE IN VIET NAM

ASSEMBLY INSTRUCTIONS

MNFD IMPA381 80" CREDENZA - SKU # 25173701, 26003816
MNFD IMPA381C 80" CREDENZA - SKU # 25173713, 26039619
MNFD IMPA381N 80" CREDENZA - SKU # 25173725, 26073724
MNFD IMPA381W 80" CREDENZA - SKU # 25173737, 26073736

Manufactured by MNFD for Rooms To Go

Version 1.0 4-29-2025

Anti-Tip hardware instruction

Position 80" 2 Doors Console in its desired location. Refer to the assembly instruction of Anti tipping kit to fit **80" Credenza** to the wall.

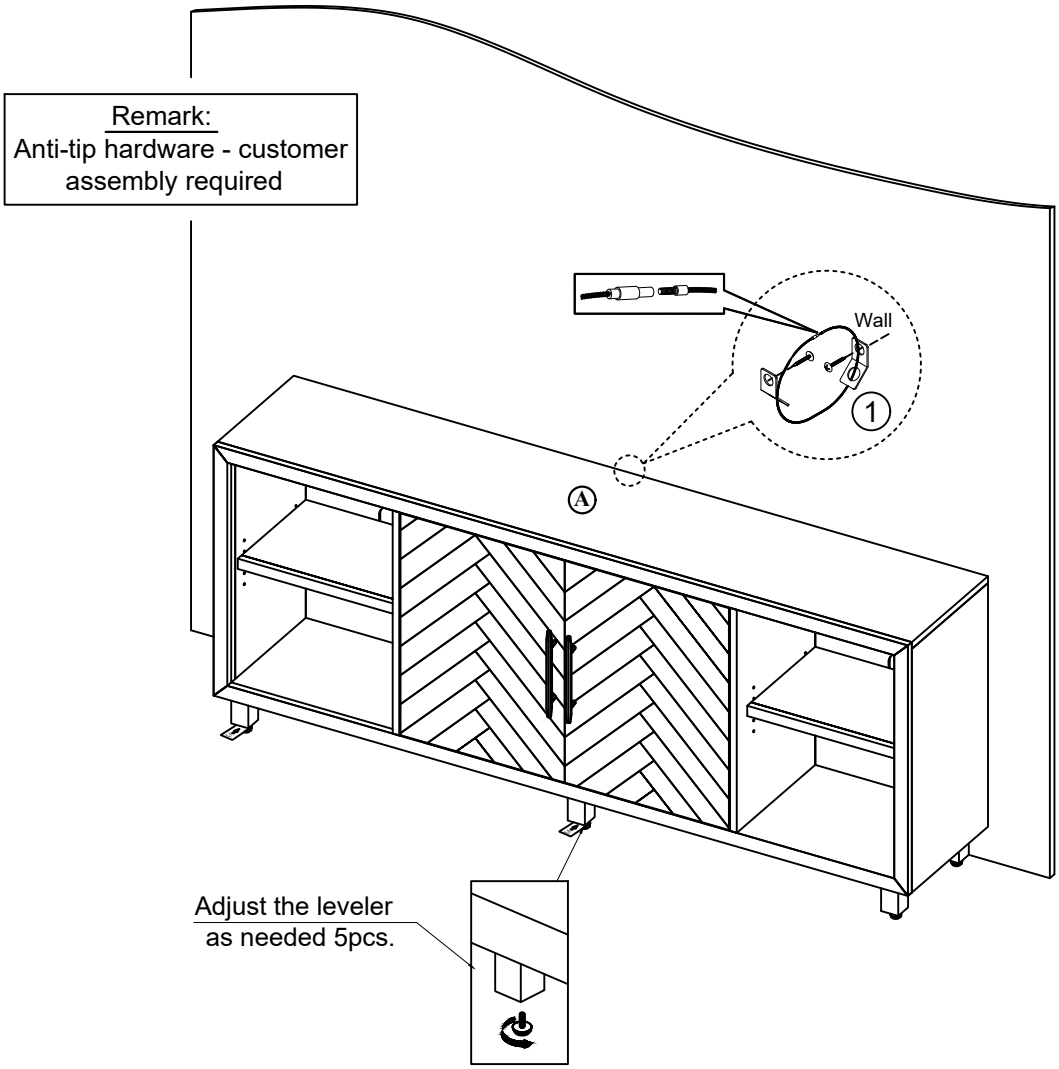

Hardware Pack Location:
MNFD IMPA381 80" CREDENZA - SKU # 25173701, 26003816
MNFD IMPA381C 80" CREDENZA - SKU # 25173713, 26039619
MNFD IMPA381N 80" CREDENZA - SKU # 25173725, 26073724
MNFD IMPA381W 80" CREDENZA - SKU # 25173737, 26073736

MADE IN VIET NAM

ASSEMBLY INSTRUCTIONS

MNFD IMPA381 80" CREDENZA - SKU # 25173701, 26003816
MNFD IMPA381C 80" CREDENZA - SKU # 25173713, 26039619
MNFD IMPA381N 80" CREDENZA - SKU # 25173725, 26073724
MNFD IMPA381W 80" CREDENZA - SKU # 25173737, 26073736

Manufactured by MNFD for Rooms To Go

Version 1.0 4-29-2025

THANK YOU FOR PURCHASING THIS QUALITY PRODUCT. BE SURE TO CHECK ALL PACKING MATERIALS CAREFULLY FOR SMALL HARDWARE WHICH MAY HAVE COME LOOSE INSIDE THE CARTON DURING SHIPMENT. IDENTIFY AND COUNT ALL HARDWARE AND COMPARE WITH THE HARDWARE LIST BELOW.

WARNING - For use with televisions weighing 90 lbs/ 40.8 Kg or less.
Use with heavier televisions may result in instability causing tip over resulting in death or serious injury.
Plasma/ LCD-flat panel TV screen of various screen size to a maximum TV screen size 77 inches. Each shelf should not be loaded more than 20lbs/ 9.1 Kg.

DO NOT EXCEED RECOMMENDED LOAD. Use with products heavier than the maximum in instability causing possible injury. Do not allow children under 16 years old to move unit. Always place TV no more than two inches from the back edge of the console. Placing TV more than two inches from the back edge may increase the risk that the console will tip over.

DO NOT REMOVE THIS LABEL

WARNING - Death or serious injury may occur when children climb on audio and/ or video equipment furniture. A remote control or toys placed on the furnishing may encourage a child to climb on the furnishing and as a result the furnishing may tip over on to the child.

WARNING - Relocate audio and/ or video equipment to furniture not specifically designed to support audio and/ or video equipment may result in death or serious injury due to the furnishing collapsing or overturning onto the child.

Manufactured by BEST FURNITURE COMPANY LIMITED
Address: SECTION A25, A26, A27, STREET 9, UYEN HUNG INDUSTRIAL PARK, TAN UYEN WARD, HO CHI MINH CITY, VIETNAM.

Hardware Pack Location:
MNFD IMPA381 80" CREDENZA - SKU # 25173701, 26003816
MNFD IMPA381C 80" CREDENZA - SKU # 25173713, 26039619
MNFD IMPA381N 80" CREDENZA - SKU # 25173725, 26073724
MNFD IMPA381W 80" CREDENZA - SKU # 25173737, 26073736

MADE IN VIET NAM

ASSEMBLY INSTRUCTIONS

MNFD IMPA381 80" CREDENZA - SKU # 25173701, 26003816
MNFD IMPA381C 80" CREDENZA - SKU # 25173713, 26039619
MNFD IMPA381N 80" CREDENZA - SKU # 25173725, 26073724
MNFD IMPA381W 80" CREDENZA - SKU # 25173737, 26073736

Manufactured by MNFD for Rooms To Go

Version 1.0 4-29-2025

THANK YOU FOR PURCHASING THIS QUALITY PRODUCT. BE SURE TO CHECK ALL PACKING MATERIALS CAREFULLY FOR SMALL HARDWARE WHICH MAY HAVE COME LOOSE INSIDE THE CARTON DURING SHIPMENT. IDENTIFY AND COUNT ALL HARDWARE AND COMPARE WITH THE HARDWARE LIST BELOW.

CARING FOR YOUR FURNITURE

Protect your investment

The beauty of furniture care is that it helps to protect your investment, as fine furniture is an important purchase. Proper care will help maintain your furniture's finish and ensure that is looks great year after year.

Caring for furniture

Caring for furniture is easy. Following a few simple guidelines will help extend the life of your furniture.

- Always dust with a cloth moistened with polish. Polish cushions the cloth, eliminating the scratching that occurs with dry dusting. Dust will scratch furniture if not removed quickly. Use a soft clean cloth that won't scratch the surface. Avoid coarse or scratchy materials or fabrics.
- Avoid using soap and water on furniture. Water can penetrate the finish and raise the grain on wood. Causing damage.

The Enemies of Furniture

Many common problems in furniture care are caused by elements. If you are aware of these troublemakers, the resulting damage can easily be avoided.

- Sunlight's ultraviolet rays can damage wood finishes. Arrange furniture our of direct sunlight use sun screening drapes during intense sunlight hours, rotate furniture in place and room arrangement.
- Liquid spills will damage furniture if not removed promptly. Use coaster under beverage glasses and saucers under cups and flowerpots. If a spill occurs, immediately blot it gently without rubbing the surface.
- Heat creates a chemical change in the furniture finish, which can result in a white spot. Use protective mats under hot dishes, utensils or cooking appliances.
- Cyclic changes in temperature can damage furniture. Placing furniture near to central heating radiators and air ducts should be avoided because this cause extreme localized drying of the wood.

Tips for Better Dusting

- Be sure to use the same type of polish consistently. Your furniture will appear cloudy or streaky if oil base or wax based polishes are interchange.
- Always use a fine furniture polish when dusting. Never dry dust, as it could cause microscopic scratches on your furniture's surface. Remember to change dusting cloths frequently since a dirty cloth may scratch your furniture's surface.
- Spray your furniture surface evenly, but not too generously. Wipe in a circular motion with a soft clean cloth to clean and loosen old polish.
- Then buff until completely dry for a beautiful shine and smudge free finish. For wood trim spray polish on the cloth first, then dust.