ROOMS TO GO®

Manufactured By YUYU For Rooms To Go

Assembly Instruction

YUYU - 8230/8240-700 DRESSER - SKU 32182305/32182406
YUYU - 8230/8240-800 MIRROR - SKU 32282307/32282408

Version 1- 2026/03/07

Caution:Please read instructions thoroughly before unpacking assembly parts.Sharp,exposed staple tips can cause injury,therefore,for your protection,please remove any exposed staple used in packing.

1.We recommend that you should assemble this product with the assistance of another person; this will make assembly easier,and will help to eliminate damage to the product or injury to persons during assembly.

2.Be sure to check all packing materials carefully for small parts that may have come lose inside the carton during shipment.

3.Please do not over tighten screws or bolts until the assembly is complete

4.Please put all parts on a non-abrasive floor before assembly,and follow the assembly steps to assemble your newly purchased product correctly and efficiently.

HARDWARE LISTS

NO	IMAGE	ITEM DESCRIPTION	Q' TY
A		(L76x4MM) ALLEN KEY	1 PC
B Pre-installed on Part 3	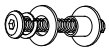	Allen Bolt : PRE-INSTALLED Ø 1/4" x 20 x 1-1/2"L	8PCS
		Flat Washer : PRE-INSTALLED Ø1/4" x Ø19mm x 1.2mm T	8PCS
		Spring Washer: PRE-INSTALLED 1/4" x Ø13mm x 1.2mm T	8PCS
		Threaded washer: PRE-INSTALLED Ø1/4" x Ø17.5mm x 7mmT	8PCS
C		FURNITURE TIPPING RESTRAINT	1 SET
		PHILLIPS SCREWDRIVER IS NOT INCLUDED IN HARDWARE PACK	

PART LISTS

NO	IMAGE	ITEM DESCRIPTION	Q' TY
1		DRESSER	1 PC
2		MIRROR	1 PC
3		MIRROR SUPPORTS	2 PCS

STEP 1

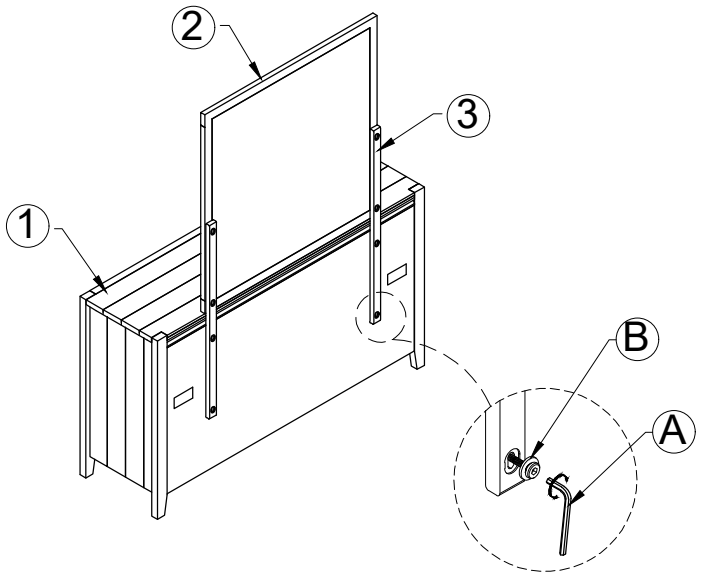

Use bolts (B) are pre-installed on support rail and Allen key (A) for this assembly step.

STEP 2

Remark: There is a tip restraint kit provided on the back of this product. Please read the directions thoroughly and install immediately when placed in home.

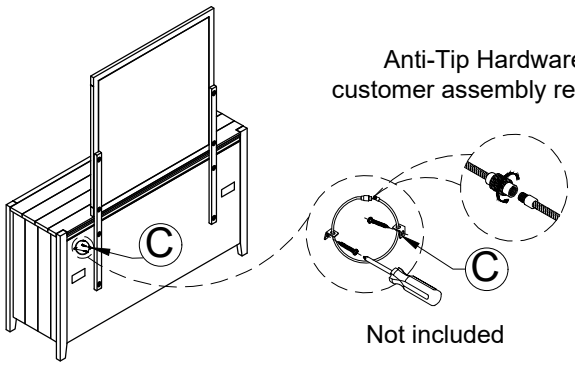

Anti-Tip Hardware- customer assembly required

Not included

COMPLETE

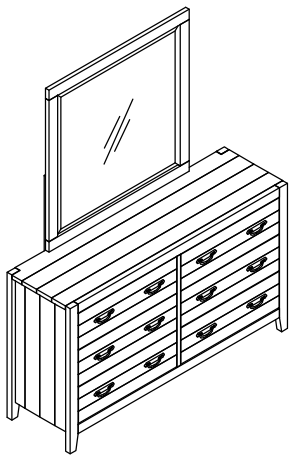

Hardware pack locations:

YUYU - 8230/8240-700 DRESSER - SKU 32182305/32182406
YUYU - 8230/8240-800 MIRROR - SKU 32282307/32282408