ROOMS TO GO

Manufactured by RVID for Rooms To Go

Assembly Instruction

RVID: 579-99 NIGHTSTAND **SKU# 32557918**
581-99 NIGHTSTAND **SKU# 32558124**
Version #1 - 2026/03/20

*** Caution: Please read all instructions carefully before starting the assembly process. These parts are cumbersome and heavy Therefore, two people are recommended in order to prevent personal injury and ensure the parts are not damaged during the assembly

*** Note: Do not tighten all the bolts until the assembly is fully complete

Code	PART LIST		
A	3 Drawer Nightstand		1PC

Code	HARDWARE LIST		
1	Anti-tipping kit		1SET

TOOLS REQUIRED (NOT PROVIDED)	
Description	Sketch
Phillips Head Screwdriver	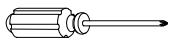

Remarks:
Anti-tip hardware must be installed by customer
Anti-tip hardware attached to the drawer of the Nightstand

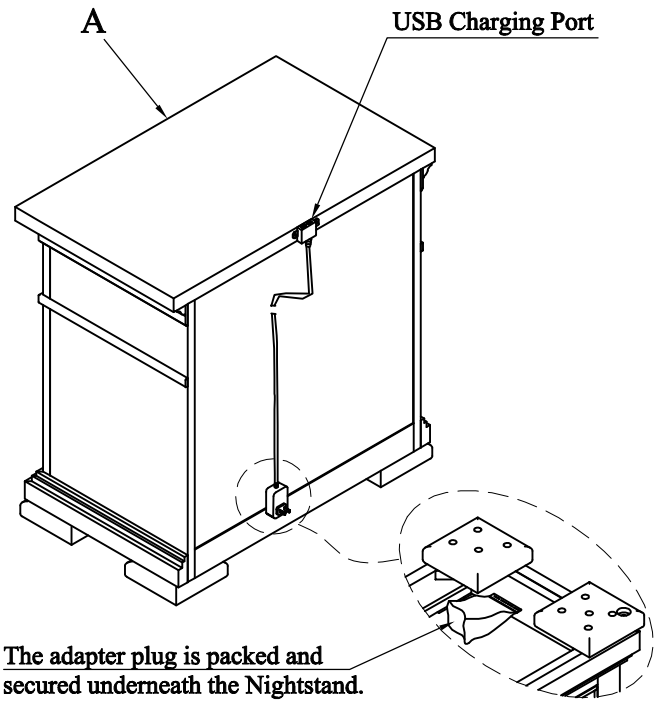

STEP 1: Move the Nightstand into its final position, then attach the anti-tip restraint (1) to the wall. Insert screw (1) using a screwdriver.

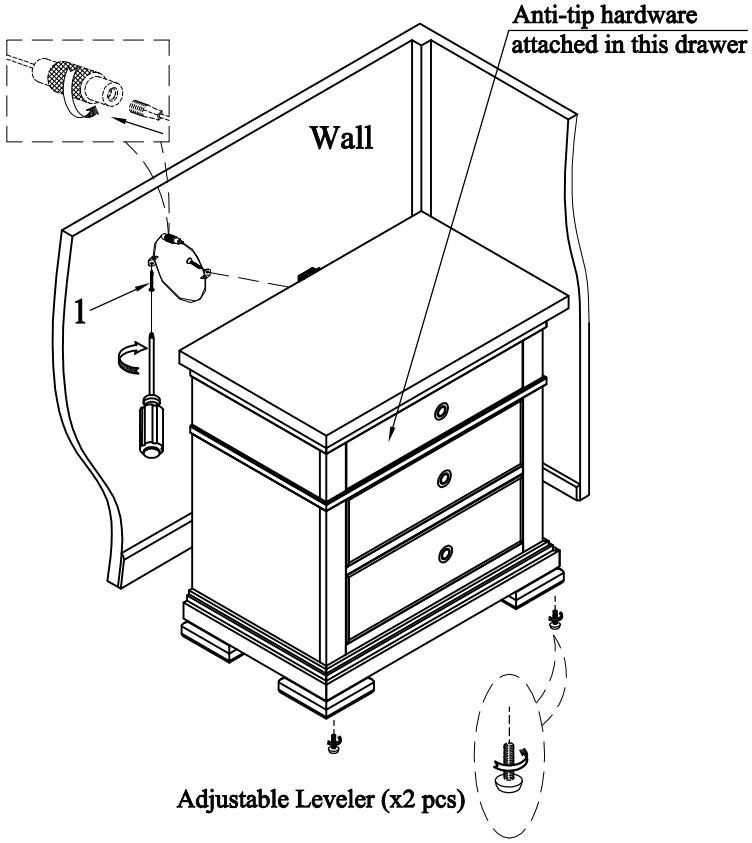

ELECTRICAL SAFETY INSTRUCTIONS

WARNING: DO not use extension cords or surge protectors unless they meet the following requirements:
- Cords must be 3rd party listed and rated for at least 15 amps at 120 V Third party listing symbol examples.
- Use the minimum length extension cord possible.
- Check the cord for fraying, cuts, melted areas, or other damage.
- Never plug an extension cord into another extension cord.
- Household outlets should be GFCI protected, otherwise a GFCI protected extension cord should be used.

Hardware Pack Location(s):

579-99 NIGHTSTAND, **SKU# 32557918**
581-99 NIGHTSTAND, **SKU# 32558124**

IMPORTANT SAFETY INSTRUCTIONS

⚠ WARNING

Misue can result in FIRE or DEATH by ELECTRICAL SHOCK

ELECTRICAL RATING (24VDC/2.0A/48Watts)
SHENZHEN QUANZHENGTONG TECHNOLOGY CO., LTD
QTZ-2402000

Read all instructions before using this furnishing.

DANGER -To reduce the risk of electric shock

- Always unplug this furnishing from the electrical outlet before cleaning of servicing.

WARING - To reduce the risk of busns, fire, electric shock, of injury to persons:

- Unplug from outlet before putting on or taking off parts.
- Never operate this furnishing if it has a damaged electrical cord of plug, if it is not working properly, of if the electrical cord of plug has been damaged of dropped into water. Stop using this furnishing and call a service center for examination and repair.
- Keep the electrical cord and plug away from heated surfaces and other heat sources.
- To disconnect, turn all controls to the off position, then remove plug from outlet.
- When operating, ensure that electrical cord is not under the base, legs, or motion mechanism to avoid damage to electrical cord or plug.
- Do not strain or stretch electrical cord.
- Do not use extension cords or power strips.
- Keep out of reach of children. This is not a toy.
- Plug directly into a compatible electrical socket.
- Do not modify the plug or use any adapters.

IMPORTANT SAFETY INSTRUCTIONS

⚠ WARNING

Al mal uso puede provocar INCENDIO o MUERTE por DESCARGA ELÉCTRICA

ELECTRICAL RATING (24VDC/2.0A/48Watts)
SHENZHEN QUANZHENGTONG TECHNOLOGY CO., LTD
QTZ-2402000

Leer todas las instrucciones antes de usar este mobiliario.

PELIGRO - Para reducir el riesgo de descarga electrica:

- Siempre desenchufe este accesorio de la toma de corrientc eléctrica antes de limpiarlo o repararlo.

ADVERTENCIA - para reducir el riesgo de quemaduras, incendios, descargas eléctricas o lesiones a personas:

- Desenchufe del tomacorriente antes de colocar o quitar partes.

- Nunca opere este accesorio si tiene un cable o enchufe eléctrico dañado, si no funciona correctamente, o si el cable o el enchufe eléctrico se ha dañado o se ha caído al agua. Deje de usar este equipamiento y llame a un centro de servicio para que lo examinen y lo reparen.
- Mantenga el cable eléctrico y el enchufe lejos de superficies calientes y otras fuentes de calor.
- Para desconectar, gire todos los controles a la posición de apagado, luego retire el enchufe del tomacorriente.
- Al operar, asegúrese de que el cable eléctrico no esté debajo de la base, las patas o el mecanismo de movimiento para evitar dañar el cable eléctrico o el enchufe.

- No fuerce ni estire el cable eléctrico.

- No utilizar cables de extensión o tomas de corriente.

- Mantener fuera del alcance de los niños. Esto no es un juguete.

- Enchúfelo directamente a una toma de corriente compatible.

- No modifique el enchufe ni utilice adaptadores.