ROOMS TO GO®

Manufactured By YUYU For Rooms To Go

Assembly Instruction

YUYU - 8230-500 2 DRAWER NIGHTSTAND - SKU 32582303
YUYU - 8240-500 2 DRAWER NIGHTSTAND - SKU 32582404

Version 1- 2026/03/07

Caution: Please read instructions thoroughly before unpacking assembly parts.Sharp,exposed staple tips can cause injury,therefore,for your protection,please remove any exposed staple used in packing.

1.We recommend that you should assemble this product with the assistance of another person; this will make assembly easier,and will help to eliminate damage to the product or injury to persons during assembly.
2.Be sure to check all packing materials carefully for small parts that may have come lose inside the carton during shipment.
3.Please do not over tighten screws or bolts until the assembly is complete
4.Please put all parts on a non-abrasive floor before assembly,and follow the assembly steps to assemble your newly purchased product correctly and efficiently.

PART LISTS

NO	IMAGE	ITEM DESCRIPTION	Q' TY
1		NIGHTSTAND	1 PC

HARDWARE LISTS

NO	IMAGE	ITEM DESCRIPTION	Q' TY
A		FURNITURE TIPPING RESTRAINT	1 SET
		PHILLIPS SCREWDRIVER IS NOT INCLUDED IN HARDWARE PACK	

STEP 1

Remark: There is a tip restraint kit provided on the back of this product. Please read the directions throughly and install immediately when placed in home.

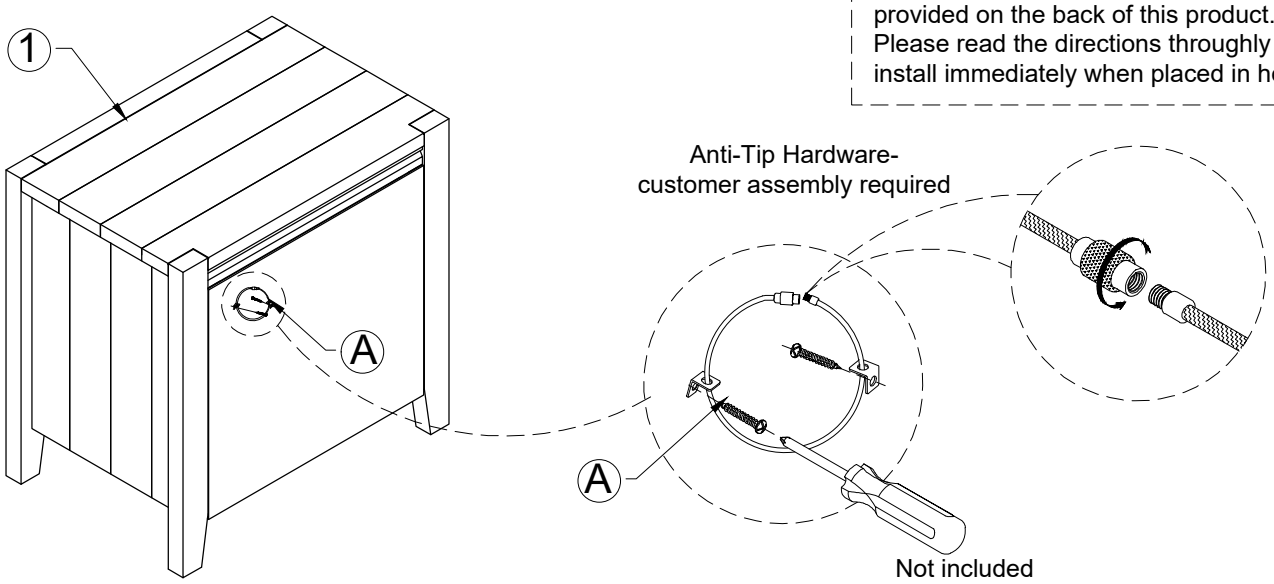

COMPLETE

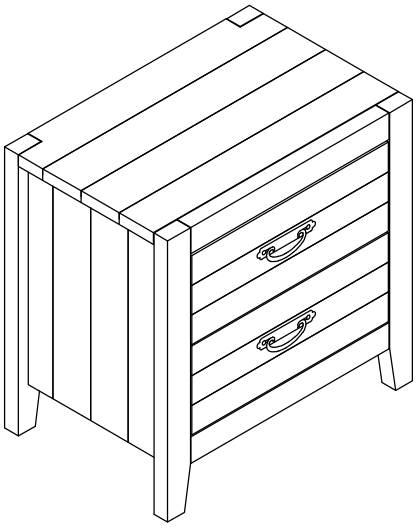

Hardware pack locations:

8230-500 2 DRAWER NIGHTSTAND - SKU 32582303
8240-500 2 DRAWER NIGHTSTAND - SKU 32582404