MODERN COLORS

FULL LOFT BED

OPTION 1:
Full loft bed headboard
is in the left-side.

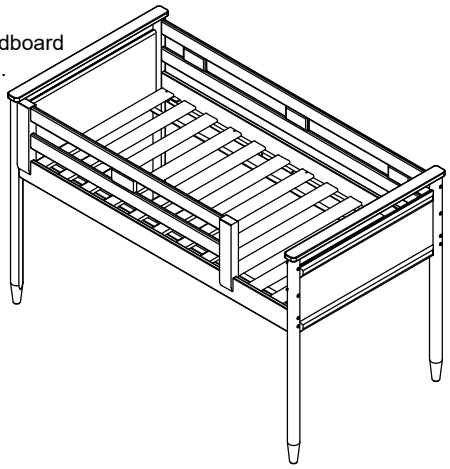

OPTION 2:
Full loft bed headboard
is in the right-side.

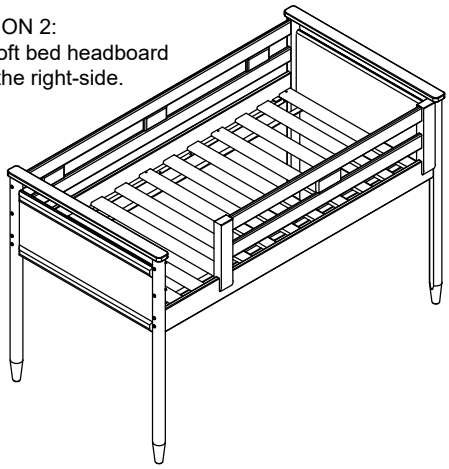

FULL LOFT BED FOR LADDER INSTALLATION

(NOTE: Please reference page 6 to 11 for assembly steps)

OPTION 1:
Full loft bed headboard
is in the left-side.

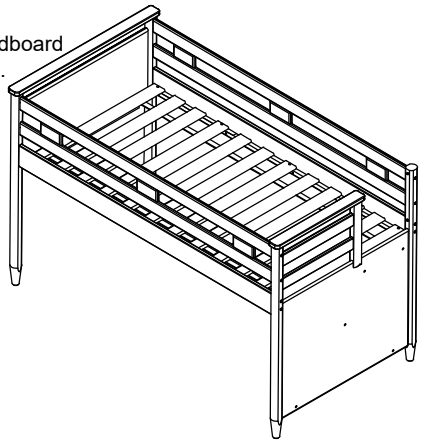

OPTION 2:
Full loft bed headboard
is in the right-side.

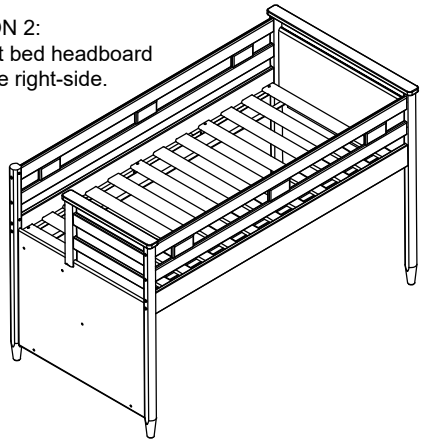

FULL LOFT BED FOR STAIRCASE INSTALLATION

(NOTE: Please reference page 12 to 16 for assembly steps)

OPTION 1:
Full loft bed headboard
is in the left-side.

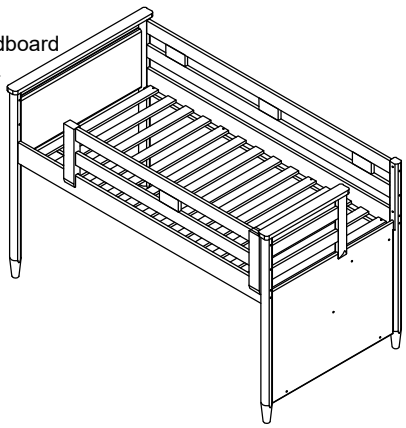

OPTION 2:
Full loft bed headboard
is in the right-side.

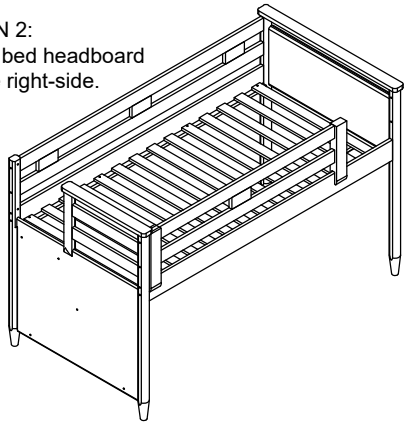

FULL LOFT BED FOR STAIRCASE & SLIDE INSTALLATION

(NOTE: Please reference page 17 to 22 for assembly steps)

Use only correct mattress dimensions and Bunkie board:
Full size mattress-74*-75"long and 52.5"-53.5"wide
Full size Bunkie board- 74" long and 52.5" wide
Futon size mattress-75"long and 53" wide

PLEASE CONTACT YOUR RETAIL STORE WITH SERVICE OR PARTS REPLACEMENT REQUEST

This product is manufactured by (JSFC) for ROOMS TO GO | KIDS

MODERN COLORS

FULL LOFT BED

FULL LOFT BED FOR LADDER INSTALLATION

SKU#	STYLE	COLOR	ITEM DESCRIPTION
35942540	425FE2-W	WHITE	FULL LOFT BED END (2PC)
36142545	425LGR-W	WHITE	3/4 LOFT BED RAIL SET
35642544	425FSLT-W	WHITE	FULL SLAT ROLL

SKU#	STYLE	COLOR	ITEM DESCRIPTION
35942538	425FE2-G	LIGHT GRAY	FULL LOFT BED END (2PC)
36142533	425LGR-G	LIGHT GRAY	3/4 LOFT BED RAIL SET
35642532	425FSLT-G	LIGHT GRAY	FULL SLAT ROLL

SKU#	STYLE	COLOR	ITEM DESCRIPTION
35942576	425FE2-PK	PINK	FULL LOFT BED END (2PC)
36142571	425LGR-PK	PINK	3/4 LOFT BED RAIL SET
35642570	425FSLT-PK	PINK	FULL SLAT ROLL

SKU#	STYLE	COLOR	ITEM DESCRIPTION
35942514	425FE2-IO	IRON ORE	FULL LOFT BED END (2PC)
36142519	425LGR-IO	IRON ORE	3/4 LOFT BED RAIL SET
35642518	425FSLT-IO	IRON ORE	FULL SLAT ROLL

SKU#	STYLE	COLOR	ITEM DESCRIPTION
35942526	425FE2-SB	SLATE BLUE	FULL LOFT BED END (2PC)
36142521	425LGR-SB	SLATE BLUE	3/4 LOFT BED RAIL SET
35642520	425FSLT-SB	SLATE BLUE	FULL SLAT ROLL

FULL LOFT BED FOR STAIRCASE INSTALLATION

SKU#	STYLE	COLOR	ITEM DESCRIPTION
36042543	425FE3-W	WHITE	FULL BED END & STEP END (3PC)
36242547	425FGR-W	WHITE	FULL LENGTH LOFT BED RAIL SET
35642544	425FSLT-W	WHITE	FULL SLAT ROLL

SKU#	STYLE	COLOR	ITEM DESCRIPTION
36042531	425FE3-G	LIGHT GRAY	FULL BED END & STEP END (3PC)
36242535	425FGR-G	LIGHT GRAY	FULL LENGTH LOFT BED RAIL SET
35642532	425FSLT-G	LIGHT GRAY	FULL SLAT ROLL

SKU#	STYLE	COLOR	ITEM DESCRIPTION
36042579	425FE3-PK	PINK	FULL BED END & STEP END (3PC)
36242573	425FGR-PK	PINK	FULL LENGTH LOFT BED RAIL SET
35642570	425FSLT-PK	PINK	FULL SLAT ROLL

SKU#	STYLE	COLOR	ITEM DESCRIPTION
36042517	425FE3-IO	IRON ORE	FULL BED END & STEP END (3PC)
36242511	425FGR-IO	IRON ORE	FULL LENGTH LOFT BED RAIL SET
35642518	425FSLT-IO	IRON ORE	FULL SLAT ROLL

SKU#	STYLE	COLOR	ITEM DESCRIPTION
36042529	425FE3-SB	SLATE BLUE	FULL BED END & STEP END (3PC)
36242523	425FGR-SB	SLATE BLUE	FULL LENGTH LOFT BED RAIL SET
35642520	425FSLT-SB	SLATE BLUE	FULL SLAT ROLL

FULL LOFT BED FOR STAIRCASE & SLIDE INSTALLATION

SKU#	STYLE	COLOR	ITEM DESCRIPTION
36042543	425FE3-W	WHITE	FULL BED END & STEP END (3PC)
36142545	425LGR-W	WHITE	3/4 LOFT BED RAIL SET
35642544	425FSLT-W	WHITE	FULL SLAT ROLL

SKU#	STYLE	COLOR	ITEM DESCRIPTION
36042531	425FE3-G	LIGHT GRAY	FULL BED END & STEP END(3PC)
36142533	425LGR-G	LIGHT GRAY	3/4 LOFT BED RAIL SET
35642532	425FSLT-G	LIGHT GRAY	FULL SLAT ROLL

SKU#	STYLE	COLOR	ITEM DESCRIPTION
36042579	425FE3-PK	PINK	FULL BED END & STEP END(3PC)
36142571	425LGR-PK	PINK	3/4 LOFT BED RAIL SET
35642570	425FSLT-PK	PINK	FULL SLAT ROLL

SKU#	STYLE	COLOR	ITEM DESCRIPTION
36042517	425FE3-IO	IRON ORE	FULL BED END & STEP END(3PC)
36142519	425LGR-IO	IRON ORE	3/4 LOFT BED RAIL SET
35642518	425FSLT-IO	IRON ORE	FULL SLAT ROLL

SKU#	STYLE	COLOR	ITEM DESCRIPTION
36042529	425FE3-SB	SLATE BLUE	FULL BED END & STEP END(3PC)
36142521	425LGR-SB	SLATE BLUE	3/4 LOFT BED RAIL SET
35642520	425FSLT-SB	SLATE BLUE	FULL SLAT ROLL

PLEASE CONTACT YOUR RETAIL STORE WITH SERVICE OR PARTS REPLACEMENT REQUEST

This product is manufactured by (JSFC) for ROOMS TO GO | KIDS

MATTRESS AND BUNKIE BOARD CHART

PACKAGE	DESCRIPTION	TOP BED
3464254P WHITE	FULL LOFT BED W/ LADDER	Full Mattress Full Bunkie board recommended
3464253P LIGHT GRAY	FULL LOFT BED W/ LADDER	Full Mattress Full Bunkie board recommended
3464257P PINK	FULL LOFT BED W/ LADDER	Full Mattress Full Bunkie board recommended
3464251P IRON ORE	FULL LOFT BED W/ LADDER	Full Mattress Full Bunkie board recommended
3464252P SLATE BLUE	FULL LOFT BED W/ LADDER	Full Mattress Full Bunkie board recommended

PACKAGE	DESCRIPTION	TOP BED
3474254P WHITE	FULL LOFT BED W/ STAIRCASE	Full Mattress Full Bunkie board recommended
3474253P LIGHT GRAY	FULL LOFT BED W/ STAIRCASE	Full Mattress Full Bunkie board recommended
3474257P PINK	FULL LOFT BED W/ STAIRCASE	Full Mattress Full Bunkie board recommended
3474251P IRON ORE	FULL LOFT BED W/ STAIRCASE	Full Mattress Full Bunkie board recommended
3474252P SLATE BLUE	FULL LOFT BED W/ STAIRCASE	Full Mattress Full Bunkie board recommended

PACKAGE	DESCRIPTION	TOP BED
3484254P WHITE	FULL LOFT BED WITH STAIRCASE & SLIDE	Full Mattress Full Bunkie board recommended
3484253P LIGHT GRAY	FULL LOFT BED WITH STAIRCASE & SLIDE	Full Mattress Full Bunkie board recommended
3484257P PINK	FULL LOFT BED WITH STAIRCASE & SLIDE	Full Mattress Full Bunkie board recommended
3484251P IRON ORE	FULL LOFT BED WITH STAIRCASE & SLIDE	Full Mattress Full Bunkie board recommended
3484252P SLATE BLUE	FULL LOFT BED WITH STAIRCASE & SLIDE	Full Mattress Full Bunkie board recommended

Use only correct mattress dimensions and Bunkie board:
Full size mattress-74*-75"long and 52.5"-53.5"wide
Full size Bunkie board- 74" long and 52.5" wide
Futon size mattress-75"long and 53" wide

This product is manufactured by (JSFC) for ROOMS TO GO | KIDS

WARNING DANGER:

Failure to follow these warnings and assembly instructions could result in serious injury or death. To help prevent serious or fatal injuries from entrapment or falls:

-Read all instructions before assembling bunk bed and keep these instructions for future reference.

-Before each usage or assembly, inspect bunk bed for damaged hardware, loose joints, missing parts, or sharp edges. DO NOT use bunk bed if any parts are missing or broken.

-DO NOT use substitute parts.Contact your local Rooms To Go or visit www.ROOMSTOGO.com for replacement parts and instructional literature if needed.

-Follow the information on the warnings appearing on the upper bunk end structure and on the carton.

DO NOT REMOVE WARNING LABEL FROM BED

-Always use the recommended size mattresses or mattress supports, or both, to help prevent the likelihood of entrapment or falls.

-Ensure thickness of mattress and foundation combined does not exceed **10** inches and mattress surface is at least 5 inches (127mm) below upper edge of guardrails for the upper bunk.

-Do not allow children under 6 years of age to use the upper bunk.

-Periodically check and ensure that the guardrail, ladder, and other components are in their proper position, free from damage, and that all connectors are tight.

-Do not allow horseplay on or under the bed and prohibit jumping on the bed.

-Limit top bunk use to one person.

-Always use the ladder for entering and leaving the upper bunk.

-Use of a night light may provide added safety precaution for a child using the upper bunk.

-Always use guardrails on both long sides of the upper bunk. If the bunk bed will be placed next to the wall, the guardrail that runs the full length of the bed should be placed against the wall to prevent entrapment between the bed and wall.

-The use of water or sleep flotation mattresses is prohibited.

-This bunk bed meets all the requirement of ASTM F1427-21e1 standard consumer safety specification for bunk beds.

STRANGULATION HAZARD:

Never attach or hang items to any part of the bunk bed that are not designed for use with the bed; for example, but not limited to, hooks, belts and jump ropes.

Pre- Assembly

Warning:

The bed slats included with this bed will not support a mattress alone, this bed does not require Bunkie boards (sold separately) but they are recommended.

Read all the instructions, identify all components,choose your configuration, and be sure you have all parts prior to assembly.

Two people are needed to assemble.

Tools Needed

Phillips heads screwdriver (not included)
4mm allen wrench (included)

MAKE SURE ALL BOLTS ARE TIGHTENED COMPLETELY

CARE INSTRUCTIONS:

Dust with a clean, soft cloth. Avoid the use of all abrasive cleaners.

PLEASE CONTACT YOUR RETAIL STORE WITH SERVICE OR PARTS REPLACEMENT REQUEST.

MODERN COLORS

FULL LOFT BED FOR LADDER INSTALLATION

BED END PART LIST			
	ITEM DESCRIPTION	IMAGE	QTY
A	HEADBOARD		1 PC
B	FOOTBOARD		1 PC

3/4 LOFT BED RAIL SET HARDWARE LIST			
	ITEM DESCRIPTION	IMAGE	QTY
1	BOLT Ø1/4*15*3"		14 PCS
2	ALLEN KEY 4mm		1 PC
3	SCREW M4 x 1"		2 PCS

3/4 RAIL SET PART LIST			
	ITEM DESCRIPTION	IMAGE	QTY
C	SIDE RAIL		2 PCS
D	GUARD RAIL		1 PCS
E	3/4 GUARD RAIL	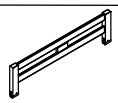	1 PC

SLAT ROLL HARDWARE LIST			
	ITEM DESCRIPTION	IMAGE	QTY
4	SCREW M4 x 1-1/4"		10 PCS
5	PHILIPS SCREWDRIVER (NOT PROVIDED)		1 PC

SLAT PART LIST			
	ITEM DESCRIPTION	IMAGE	QTY
G	SLAT ROLL	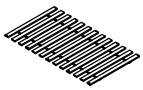	1 SET

HARDWARE PACK LOCATION

SKU#	STYLE	COLOR	ITEM DESCRIPTION
36142545	425LGR-W	WHITE	3/4 LOFT BED RAIL SET
36142533	425LGR-G	LIGHT GRAY	3/4 LOFT BED RAIL SET
36142571	425LGR-PK	PINK	3/4 LOFT BED RAIL SET
36142519	425LGR-IO	IRON ORE	3/4 LOFT BED RAIL SET
36142521	425LGR-SB	SLATE BLUE	3/4 LOFT BED RAIL SET

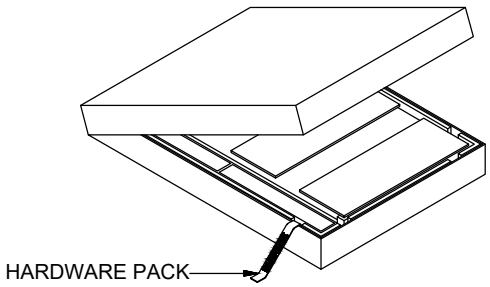

PLEASE CONTACT YOUR RETAIL STORE WITH SERVICE OR PARTS REPLACEMENT REQUEST

This product is manufactured by (JSFC) for ROOMS TO GO | KIDS

MODERN COLORS

FULL LOFT BED FOR LADDER INSTALLATION

Thank you for purchasing this quality product. Be sure to check all packing material carefully for small parts which may have come loose inside the carton during shipment. Identify and count all parts and compare with the parts list below. Read all instructions before assembling bed and keep these instruction for future reference.

Assembly Instructions:

STEP 1

OPTION 1:
Full loft bed headboard is in the left-side.

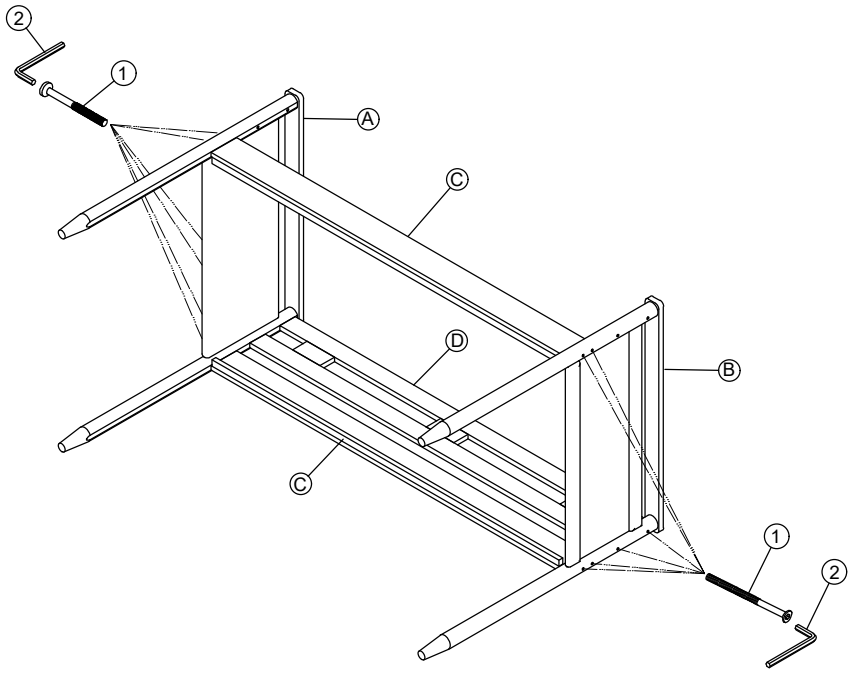

OPTION 2:
Full loft bed headboard is in the right-side.

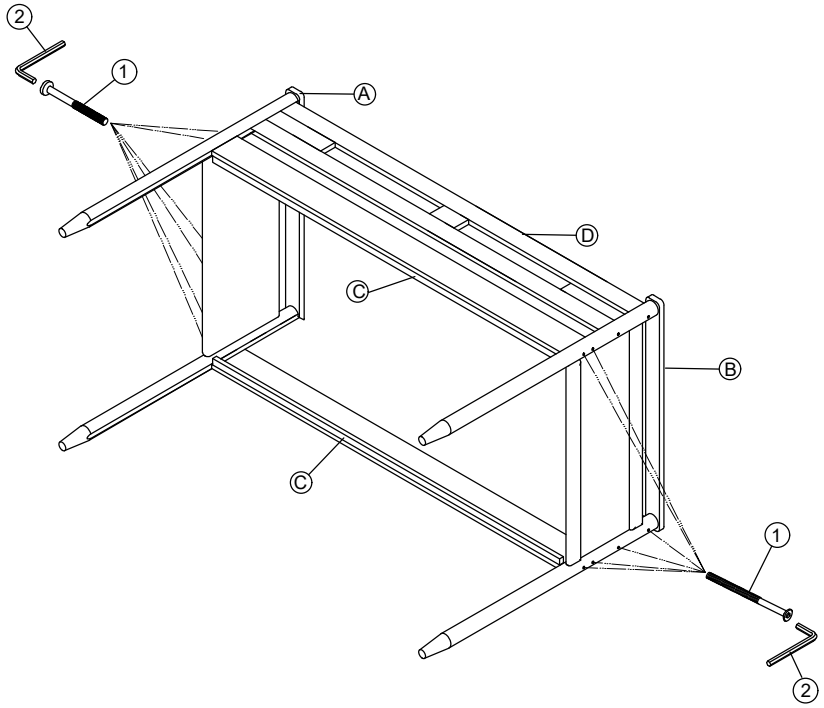

DO NOT USE SUBSTITUTE PARTS. PLEASE CONTACT YOUR RETAIL STORE OR WWW.ROOMSTOGO.COM WITH SERVICE OR PARTS REPLACEMENT REQUEST.

This product is manufactured by (JSFC) for ROOMS TO GO | KIDS

MODERN COLORS

FULL LOFT BED FOR LADDER INSTALLATION

Thank you for purchasing this quality product. Be sure to check all packing material carefully for small parts which may have come loose inside the carton during shipment. Identify and count all parts and compare with the parts list below. Read all instructions before assembling bed and keep these instruction for future reference.

Assembly Instructions:

STEP 2

OPTION 1:
Full loft bed headboard is in the left-side.

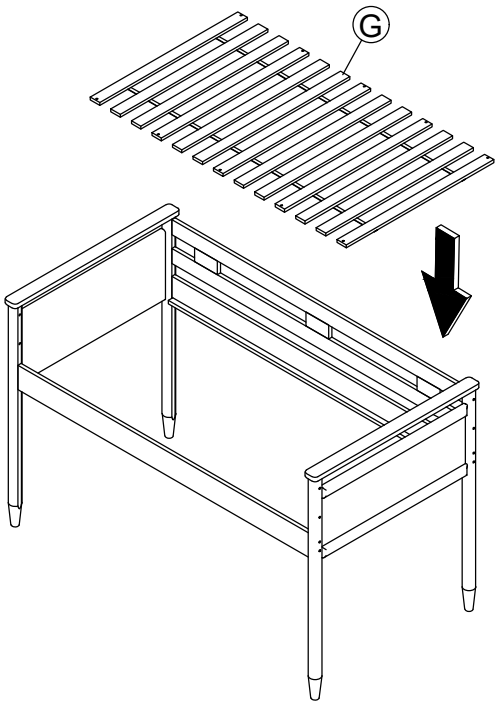

OPTION 2:
Full loft bed headboard is in the right-side.

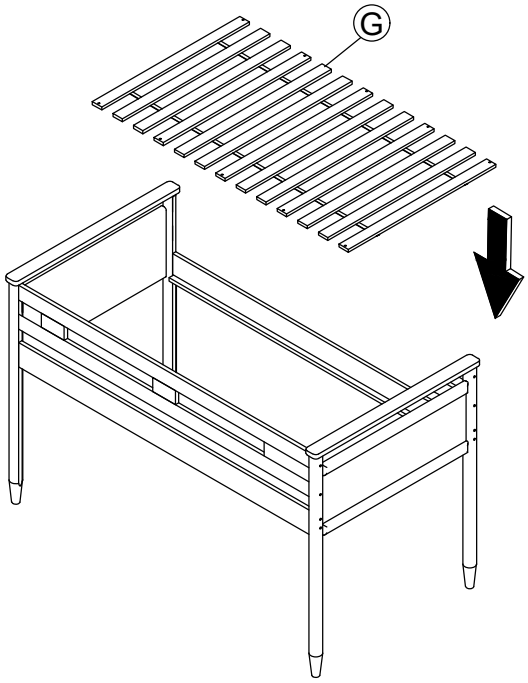

DO NOT USE SUBSTITUTE PARTS. PLEASE CONTACT YOUR RETAIL STORE OR WWW.ROOMSTOGO.COM WITH SERVICE OR PARTS REPLACEMENT REQUEST.

This product is manufactured by (JSFC) for ROOMS TO GO | KIDS

MODERN COLORS

FULL LOFT BED FOR LADDER INSTALLATION

Thank you for purchasing this quality product. Be sure to check all packing material carefully for small parts which may have come loose inside the carton during shipment. Identify and count all parts and compare with the parts list below. Read all instructions before assembling bed and keep these instruction for future reference.

Assembly Instructions:

STEP 3

OPTION 1:
Full loft bed headboard is in the left-side.

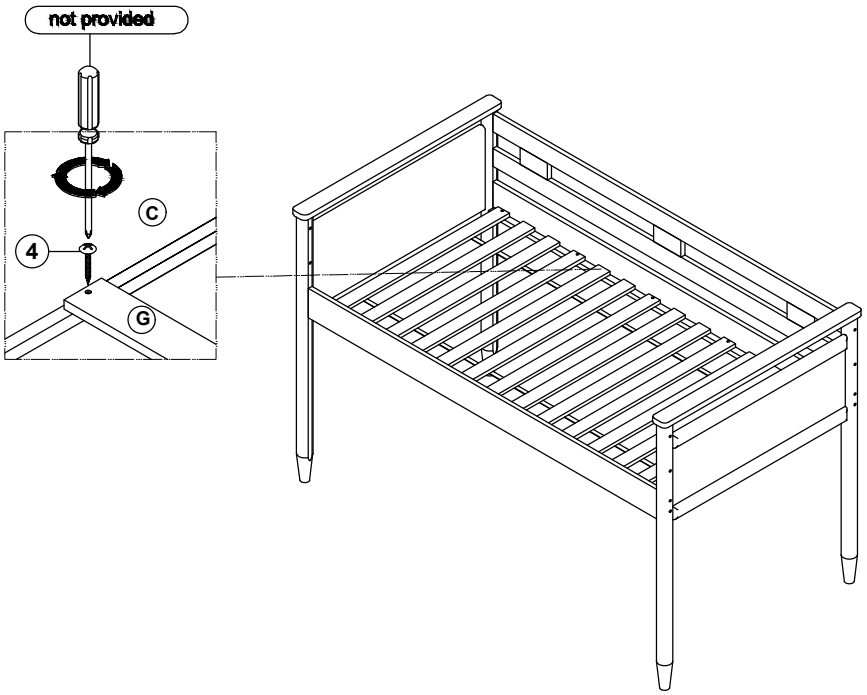

OPTION 2:
Full loft bed headboard is in the right-side.

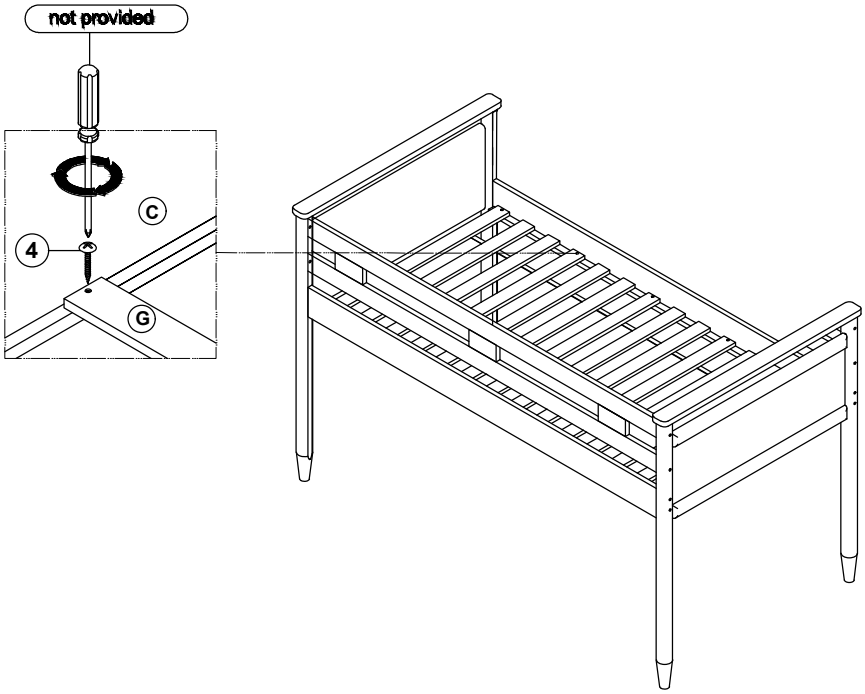

DO NOT USE SUBSTITUTE PARTS. PLEASE CONTACT YOUR RETAIL STORE OR WWW.ROOMSTOGO.COM WITH SERVICE OR PARTS REPLACEMENT REQUEST.

This product is manufactured by (JSFC) for ROOMS TO GO | KIDS

MODERN COLORS

FULL LOFT BED FOR LADDER INSTALLATION

Thank you for purchasing this quality product. Be sure to check all packing material carefully for small parts which may have come loose inside the carton during shipment. Identify and count all parts and compare with the parts list below. Read all instructions before assembling bed and keep these instruction for future reference.

Assembly Instructions:

STEP 4

OPTION 1:
Full loft bed headboard is in the left-side.

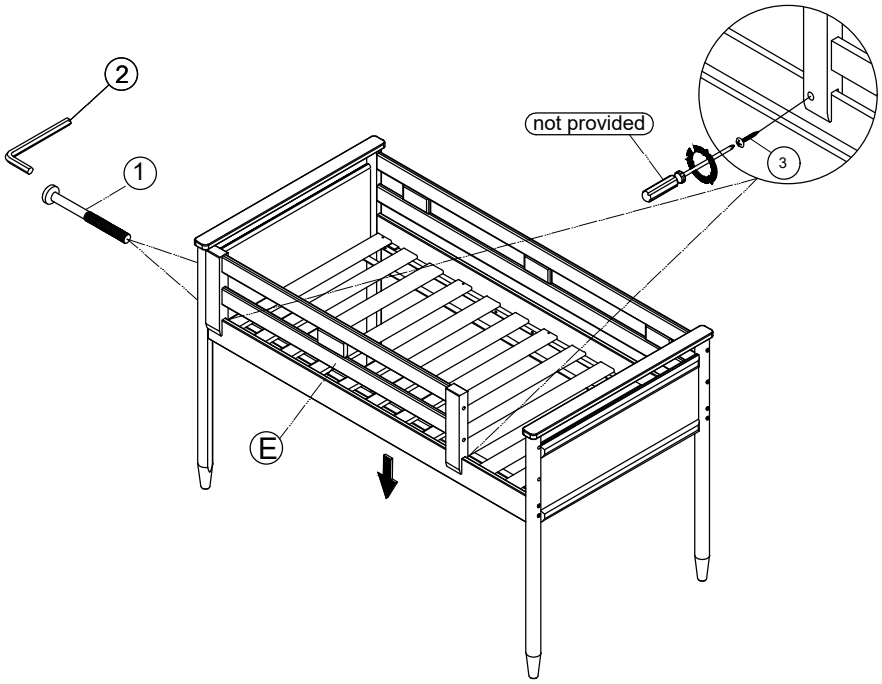

OPTION 2:
Full loft bed headboard is in the right-side.

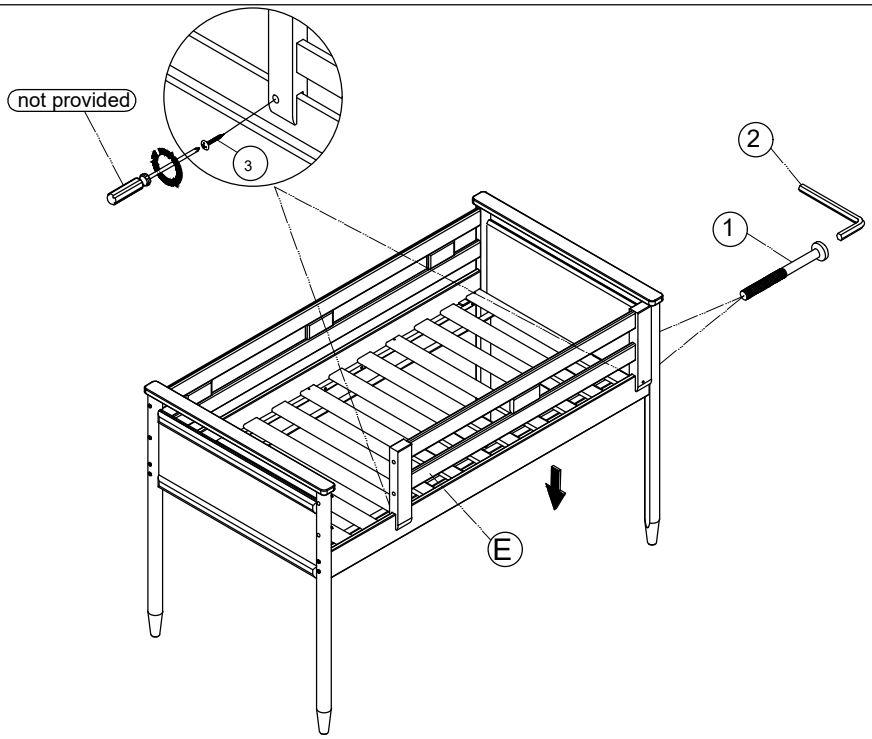

DO NOT USE SUBSTITUTE PARTS. PLEASE CONTACT YOUR RETAIL STORE OR WWW.ROOMSTOGO.COM WITH SERVICE OR PARTS REPLACEMENT REQUEST.

This product is manufactured by (JSFC) for ROOMS TO GO | KIDS

MODERN COLORS

FULL LOFT BED FOR LADDER INSTALLATION

Thank you for purchasing this quality product. Be sure to check all packing material carefully for small parts which may have come loose inside the carton during shipment. Identify and count all parts and compare with the parts list below. Read all instructions before assembling bed and keep these instruction for future reference.

Assembly Instructions:

STEP 5

OPTION 1:
Full loft bed headboard is in the left-side.

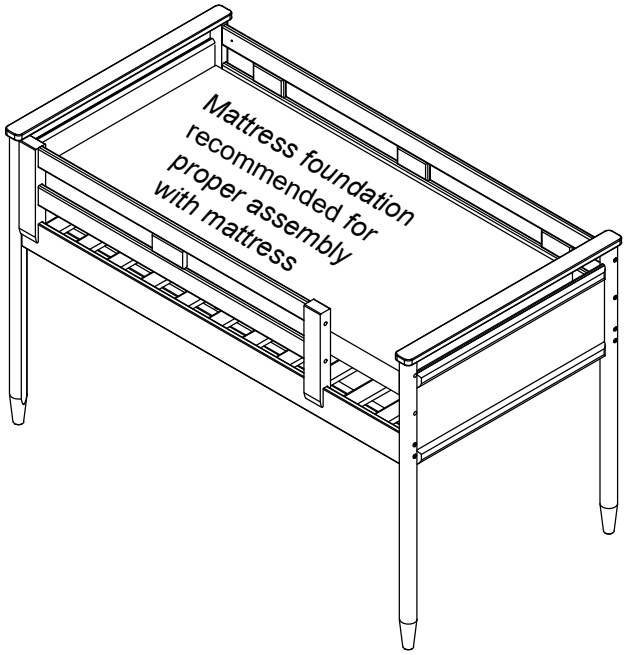

OPTION 2:
Full loft bed headboard is in the right-side.

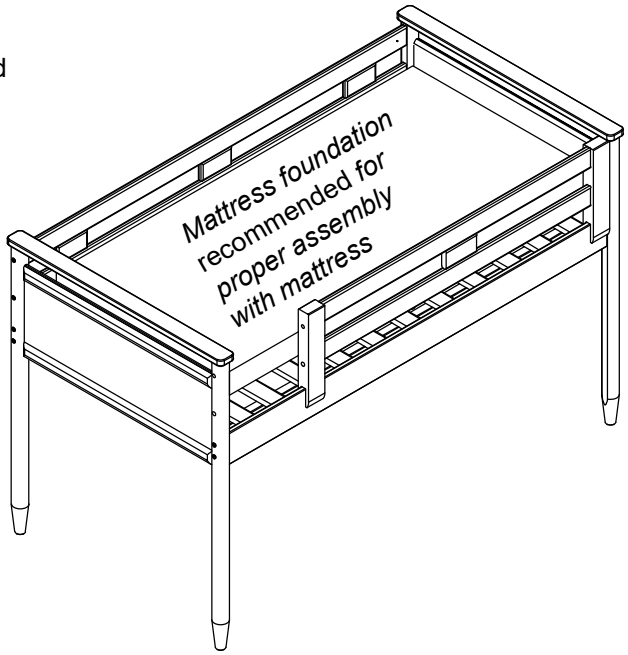

A mattress foundation is recommended for proper assembly with mattress.
Place the mattress foundation (not provided) on top.

DO NOT USE SUBSTITUTE PARTS. PLEASE CONTACT YOUR RETAIL STORE OR WWW.ROOMSTOGO.COM WITH SERVICE OR PARTS REPLACEMENT REQUEST.

This product is manufactured by (JSFC) for ROOMS TO GO | KIDS

MODERN COLORS

FULL LOFT BED FOR STAIRCASE INSTALLATION

BED END PART LIST			
	ITEM DESCRIPTION	IMAGE	QTY
A	HEADBOARD	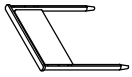	1 PC
B	FOOTBOARD	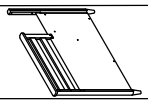	1 PC
F	STAIRCASE END PANEL	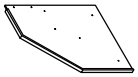	1 pc

RAIL SET PART LIST			
	ITEM DESCRIPTION	IMAGE	QTY
C	SIDE RAIL	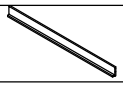	2 PCS
D	GUARD RAIL		2 PCS

SLAT ROLL PART LIST			
	ITEM DESCRIPTION	IMAGE	QTY
G	SLAT ROLL	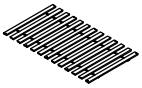	1 SET

FULL LENGTH LOFT BED RAIL SET HARDWARE LIST			
	ITEM DESCRIPTION	IMAGE	QTY
1	BOLT Ø1/4*15*3"		16 PCS
2	ALLEN KEY 4mm		1 PC

SLAT ROLL HARDWARE LIST			
	ITEM DESCRIPTION	IMAGE	QTY
4	SCREW M4 x 1-1/4"		10 PCS
5	PHILIPS SCREWDRIVER (NOT PROVIDED)	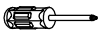	1 PC

HARDWARE PACK LOCATION

SKU#	STYLE	COLOR	ITEM DESCRIPTION
36242547	425FGR-W	WHITE	FULL LENGTH LOFT BED RAIL SET
36242535	425FGR-G	LIGHT GRAY	FULL LENGTH LOFT BED RAIL SET
36242573	425FGR-PK	PINK	FULL LENGTH LOFT BED RAIL SET
36242511	425FGR-IO	IRON ORE	FULL LENGTH LOFT BED RAIL SET
36242523	425FGR-SB	SLATE BLUE	FULL LENGTH LOFT BED RAIL SET

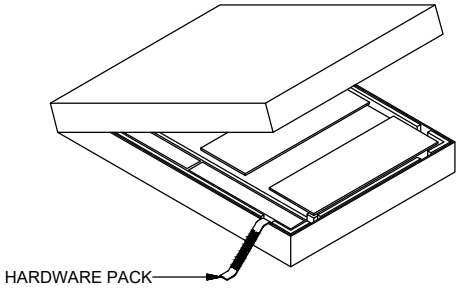

PLEASE CONTACT YOUR RETAIL STORE WITH SERVICE OR PARTS REPLACEMENT REQUEST

This product is manufactured by (JSFC) for ROOMS TO GO | KIDS

MODERN COLORS

FULL LOFT BED FOR STAIRCASE INSTALLATION

Thank you for purchasing this quality product. Be sure to check all packing material carefully for small parts which may have come loose inside the carton during shipment. Identify and count all parts and compare with the parts list below. Read all instructions before assembling bed and keep these instruction for future reference.

Assembly Instructions:

STEP 1

OPTION 1:
Full loft bed headboard is in the left-side.

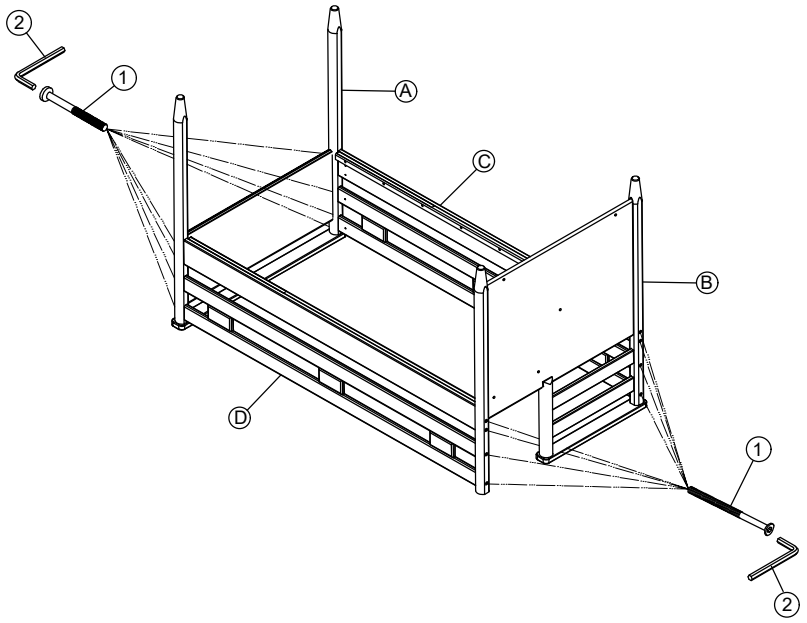

OPTION 2:
Full loft bed headboard is in the right-side.

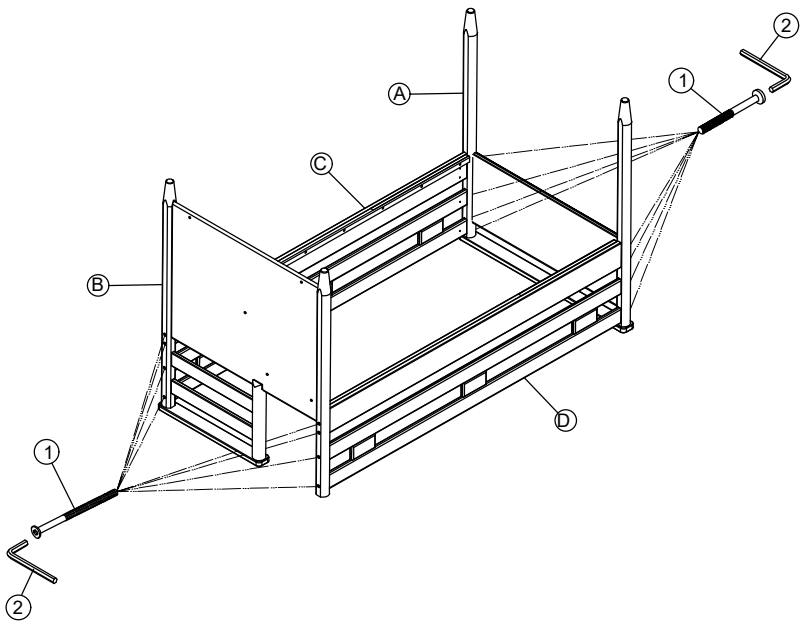

DO NOT USE SUBSTITUTE PARTS. PLEASE CONTACT YOUR RETAIL STORE OR WWW.ROOMSTOGO.COM WITH SERVICE OR PARTS REPLACEMENT REQUEST.

This product is manufactured by (JSFC) for ROOMS TO GO | KIDS

MODERN COLORS

FULL LOFT BED FOR STAIRCASE INSTALLATION

Thank you for purchasing this quality product. Be sure to check all packing material carefully for small parts which may have come loose inside the carton during shipment. Identify and count all parts and compare with the parts list below. Read all instructions before assembling bed and keep these instruction for future reference.

Assembly Instructions:

STEP 2

OPTION 1:
Full loft bed headboard is in the left-side.

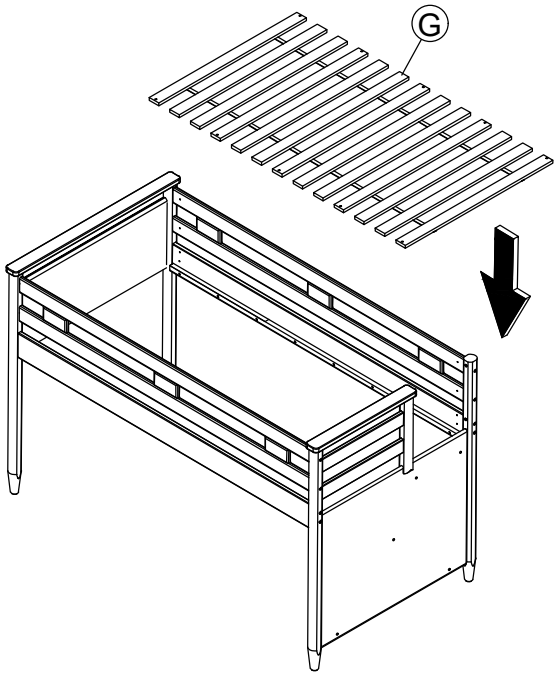

OPTION 2:
Full loft bed headboard is in the right-side.

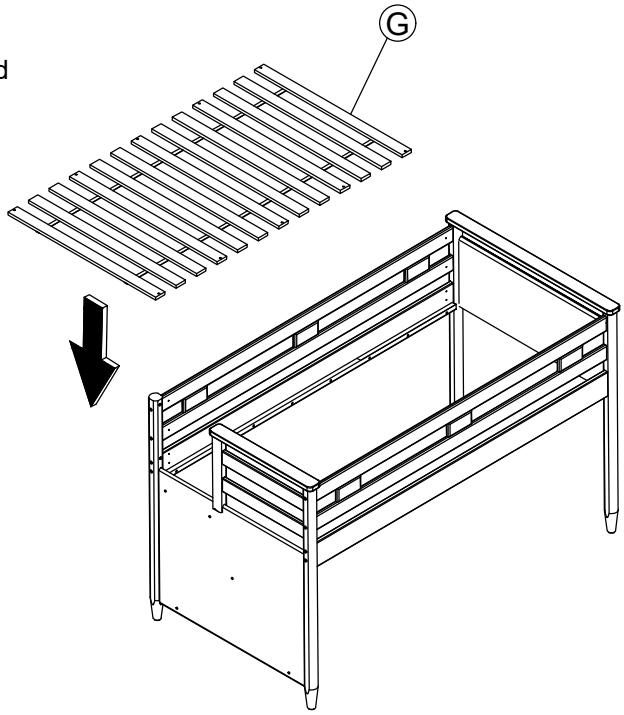

DO NOT USE SUBSTITUTE PARTS. PLEASE CONTACT YOUR RETAIL STORE OR WWW.ROOMSTOGO.COM WITH SERVICE OR PARTS REPLACEMENT REQUEST.

This product is manufactured by (JSFC) for ROOMS TO GO | KIDS

MODERN COLORS

FULL LOFT BED FOR STAIRCASE INSTALLATION

Thank you for purchasing this quality product. Be sure to check all packing material carefully for small parts which may have come loose inside the carton during shipment. Identify and count all parts and compare with the parts list below. Read all instructions before assembling bed and keep these instruction for future reference.

Assembly Instructions:

STEP 3

OPTION 1:
Full loft bed headboard is in the left-side.

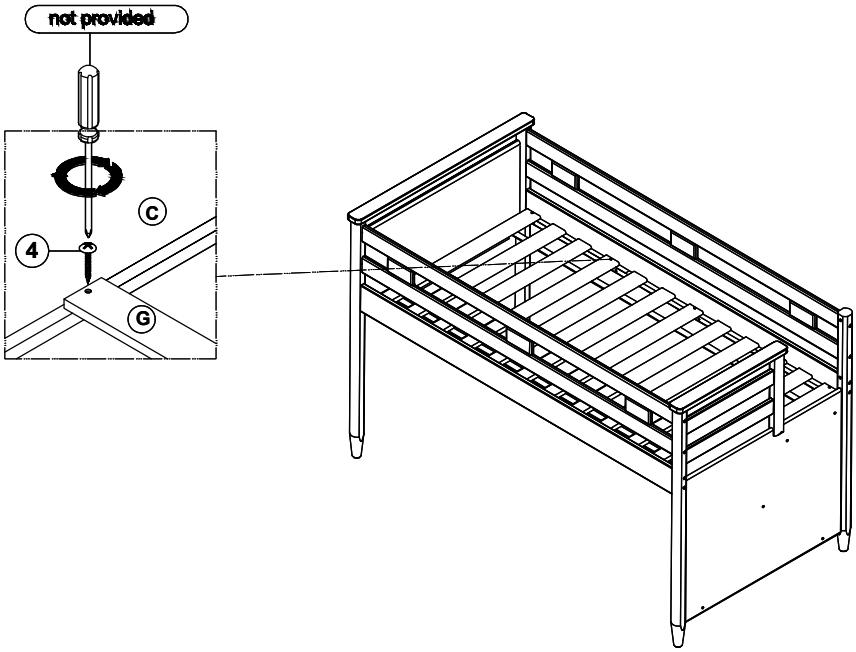

OPTION 2:
Full loft bed headboard is in the right-side.

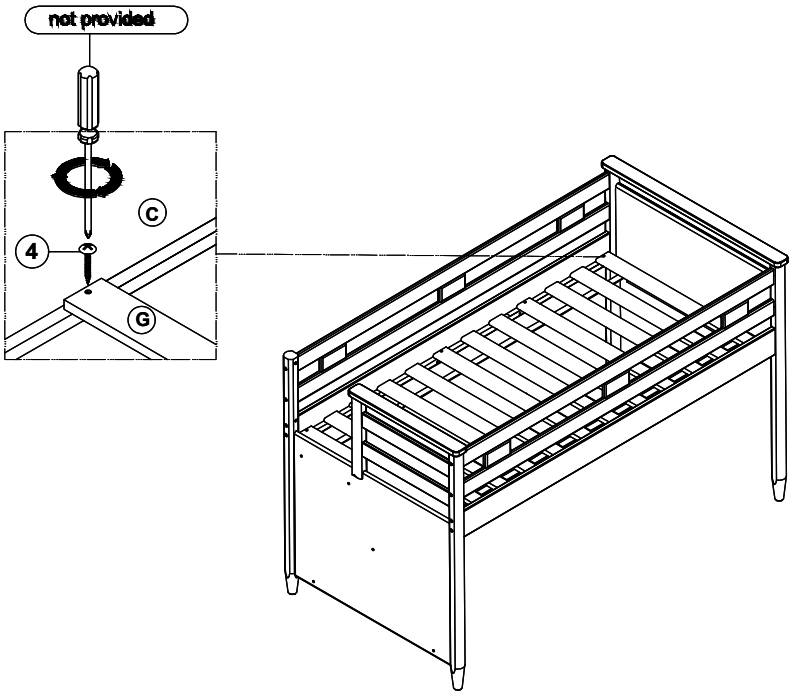

DO NOT USE SUBSTITUTE PARTS. PLEASE CONTACT YOUR RETAIL STORE OR WWW.ROOMSTOGO.COM WITH SERVICE OR PARTS REPLACEMENT REQUEST.

This product is manufactured by (JSFC) for ROOMS TO GO | KIDS

MODERN COLORS

FULL LOFT BED FOR STAIRCASE INSTALLATION

Thank you for purchasing this quality product. Be sure to check all packing material carefully for small parts which may have come loose inside the carton during shipment. Identify and count all parts and compare with the parts list below. Read all instructions before assembling bed and keep these instruction for future reference.

Assembly Instructions:

STEP 4

OPTION 1:
Full loft bed headboard is in the left-side.

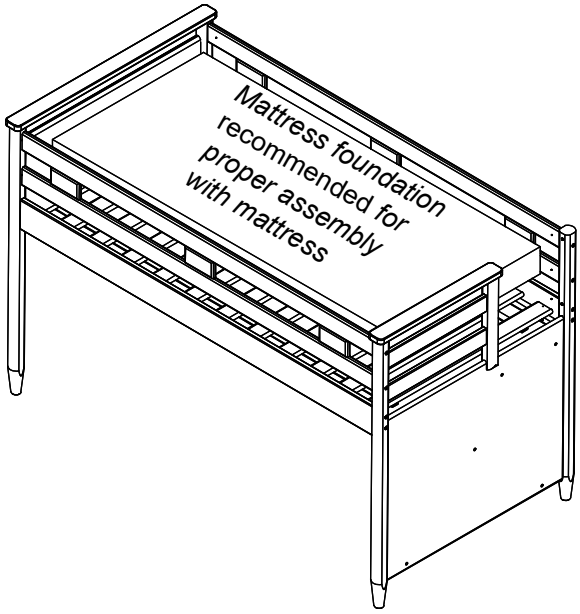

OPTION 2:
Full loft bed headboard is in the right-side.

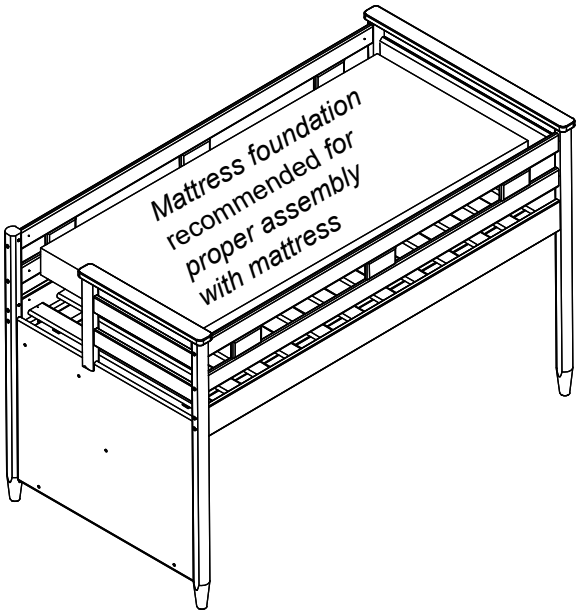

A mattress foundation is recommended for proper assembly with mattress.
Place the mattress foundation (not provided) on top.

DO NOT USE SUBSTITUTE PARTS. PLEASE CONTACT YOUR RETAIL STORE OR WWW.ROOMSTOGO.COM WITH SERVICE OR PARTS REPLACEMENT REQUEST.

This product is manufactured by (JSFC) for ROOMS TO GO | KIDS

MODERN COLORS

FULL LOFT BED FOR STAIRCASE & SLIDE INSTALLATION

BED END PART LIST			
	ITEM DESCRIPTION	IMAGE	QTY
A	HEADBOARD	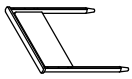	1 PC
B	FOOTBOARD	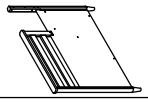	1 PC
F	STAIRCASE END PANEL	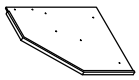	1 pc

3/4 LOFT BED RAIL SET HARDWARE LIST			
	ITEM DESCRIPTION	IMAGE	QTY
1	BOLT Ø1/4*15*3"		14 PCS
2	ALLEN KEY 4mm		1 PC
3	SCREW M4 x 1"		2 PCS

SLAT ROLL HARDWARE LIST			
	ITEM DESCRIPTION	IMAGE	QTY
4	SCREW M4 x 1-1/4"		10 PCS
5	PHILIPS SCREWDRIVER (NOT PROVIDED)	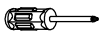	1 PC

3/4 RAIL SET PART LIST			
	ITEM DESCRIPTION	IMAGE	QTY
C	SIDE RAIL		2 PCS
D	GUARD RAIL		1 PCS
E	3/4 GUARD RAIL	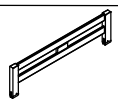	1 PC

SLAT PART LIST			
	ITEM DESCRIPTION	IMAGE	QTY
G	SLAT ROLL	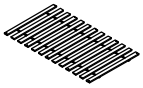	1 SET

HARDWARE PACK LOCATION

SKU#	STYLE	COLOR	ITEM DESCRIPTION
36142545	425LGR-W	WHITE	3/4 LOFT BED RAIL SET
36142533	425LGR-G	LIGHT GRAY	3/4 LOFT BED RAIL SET
36142571	425LGR-PK	PINK	3/4 LOFT BED RAIL SET
36142519	425LGR-IO	IRON ORE	3/4 LOFT BED RAIL SET
36142521	425LGR-SB	SLATE BLUE	3/4 LOFT BED RAIL SET

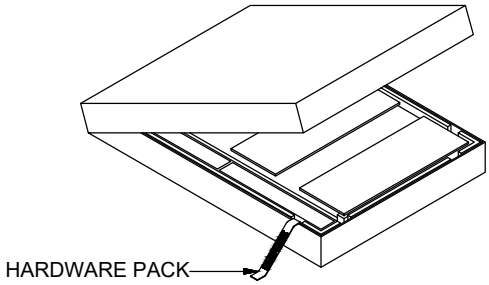

PLEASE CONTACT YOUR RETAIL STORE WITH SERVICE OR PARTS REPLACEMENT REQUEST

This product is manufactured by (JSFC) for ROOMS TO GO | KIDS

MODERN COLORS

FULL LOFT BED FOR STAIRCASE & SLIDE INSTALLATION

Thank you for purchasing this quality product. Be sure to check all packing material carefully for small parts which may have come loose inside the carton during shipment. Identify and count all parts and compare with the parts list below. Read all instructions before assembling bed and keep these instruction for future reference.

Assembly Instructions:

STEP 1

OPTION 1:
Full loft bed headboard is in the left-side.

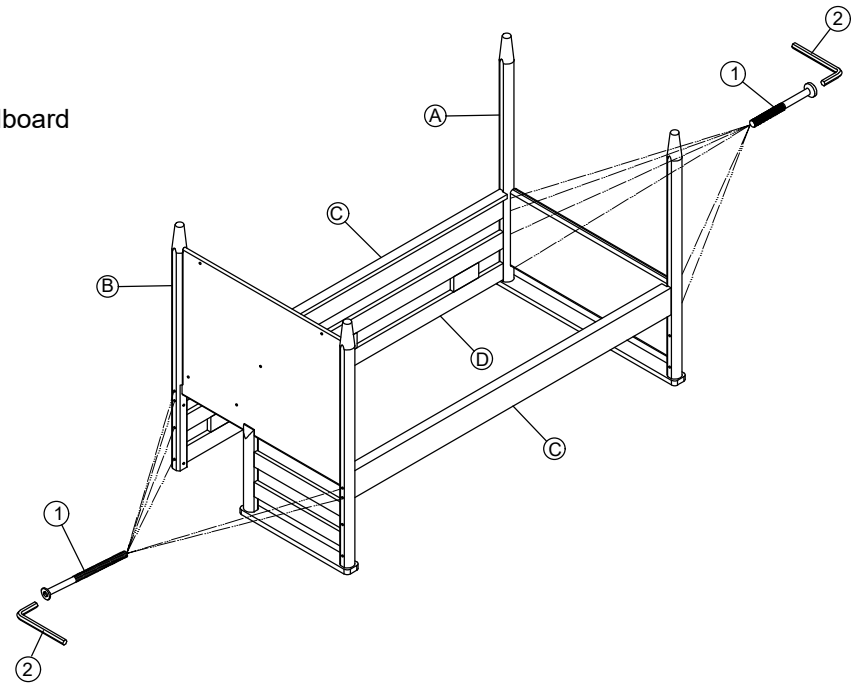

OPTION 2:
Full loft bed headboard is in the right-side.

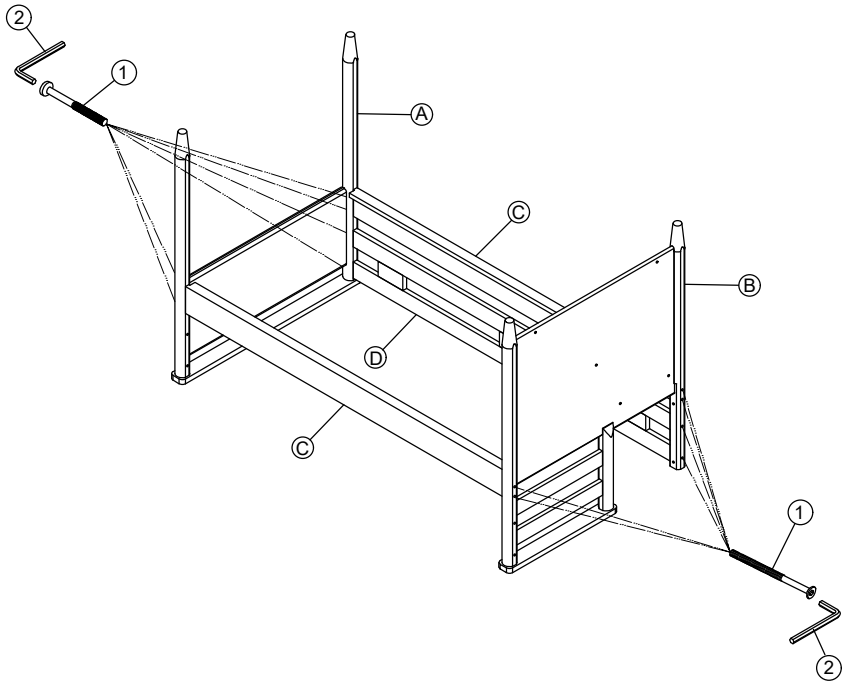

DO NOT USE SUBSTITUTE PARTS. PLEASE CONTACT YOUR RETAIL STORE OR WWW.ROOMSTOGO.COM WITH SERVICE OR PARTS REPLACEMENT REQUEST.

This product is manufactured by (JSFC) for ROOMS TO GO | KIDS

MODERN COLORS

FULL LOFT BED FOR STAIRCASE & SLIDE INSTALLATION

Thank you for purchasing this quality product. Be sure to check all packing material carefully for small parts which may have come loose inside the carton during shipment. Identify and count all parts and compare with the parts list below. Read all instructions before assembling bed and keep these instruction for future reference.

Assembly Instructions:

STEP 2

OPTION 1:
Full loft bed headboard is in the left-side.

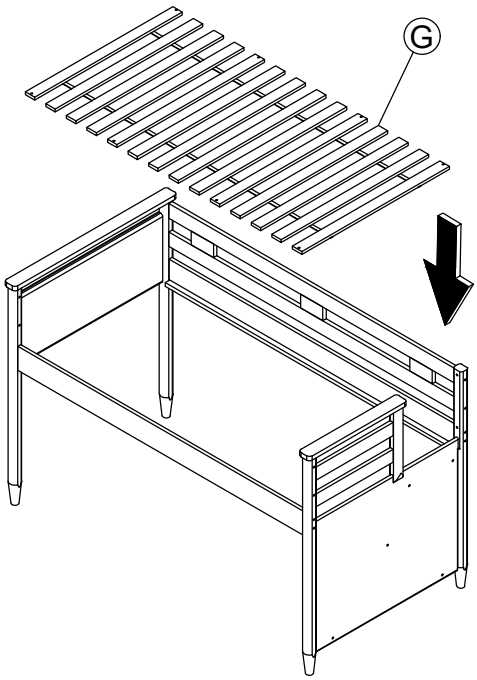

OPTION 2:
Full loft bed headboard is in the right-side.

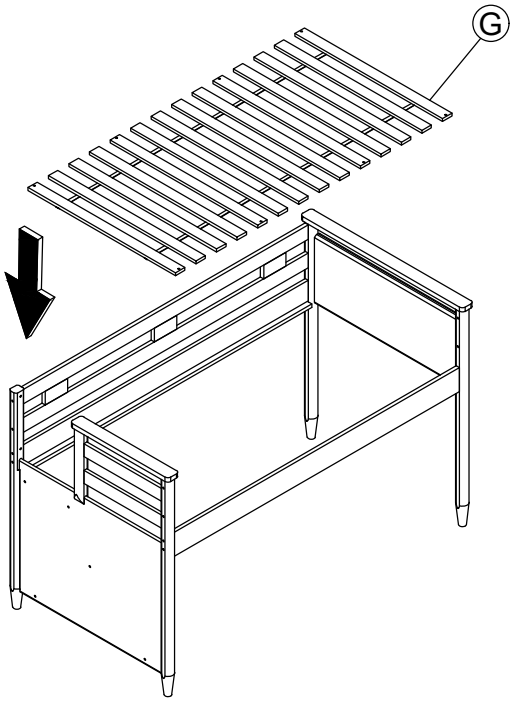

DO NOT USE SUBSTITUTE PARTS. PLEASE CONTACT YOUR RETAIL STORE OR WWW.ROOMSTOGO.COM WITH SERVICE OR PARTS REPLACEMENT REQUEST.

This product is manufactured by (JSFC) for ROOMS TO GO | KIDS

MODERN COLORS

FULL LOFT BED FOR STAIRCASE & SLIDE INSTALLATION

Thank you for purchasing this quality product. Be sure to check all packing material carefully for small parts which may have come loose inside the carton during shipment. Identify and count all parts and compare with the parts list below. Read all instructions before assembling bed and keep these instruction for future reference.

Assembly Instructions:

STEP 3

OPTION 1:
Full loft bed headboard is in the left-side.

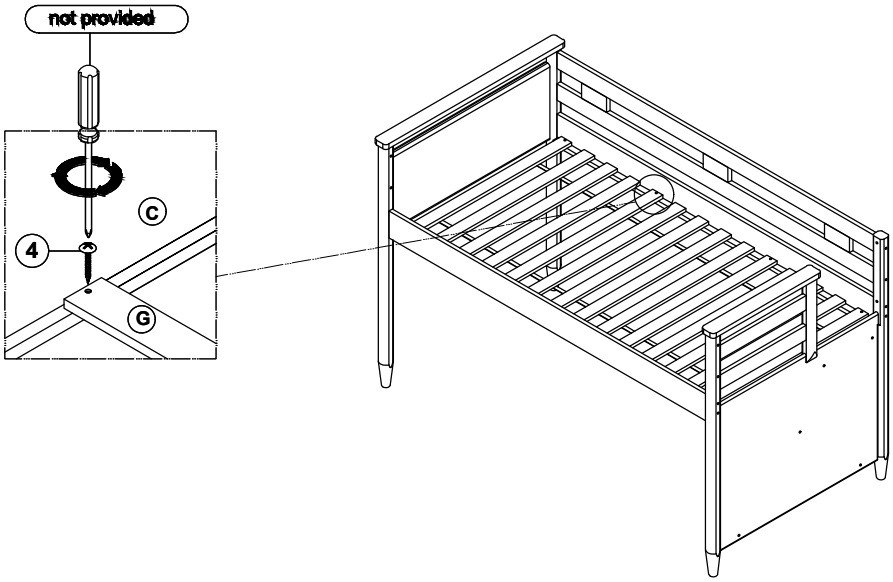

OPTION 2:
Full loft bed headboard is in the right-side.

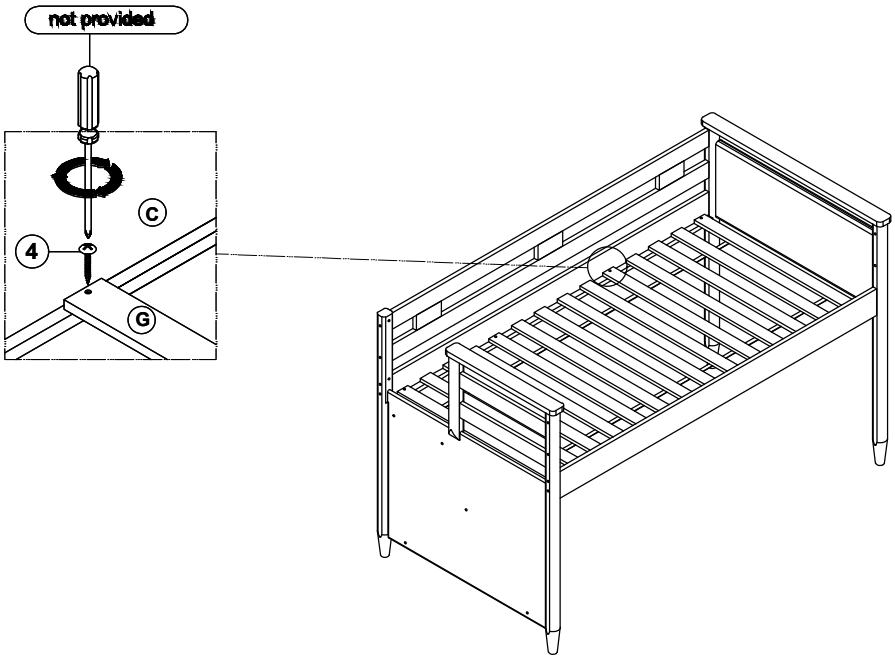

DO NOT USE SUBSTITUTE PARTS. PLEASE CONTACT YOUR RETAIL STORE OR WWW.ROOMSTOGO.COM WITH SERVICE OR PARTS REPLACEMENT REQUEST.

This product is manufactured by (JSFC) for ROOMS TO GO | KIDS

MODERN COLORS

FULL LOFT BED FOR STAIRCASE & SLIDE INSTALLATION

Thank you for purchasing this quality product. Be sure to check all packing material carefully for small parts which may have come loose inside the carton during shipment. Identify and count all parts and compare with the parts list below. Read all instructions before assembling bed and keep these instruction for future reference.

Assembly Instructions:

STEP 4

OPTION 1:
Full loft bed headboard is in the left-side.

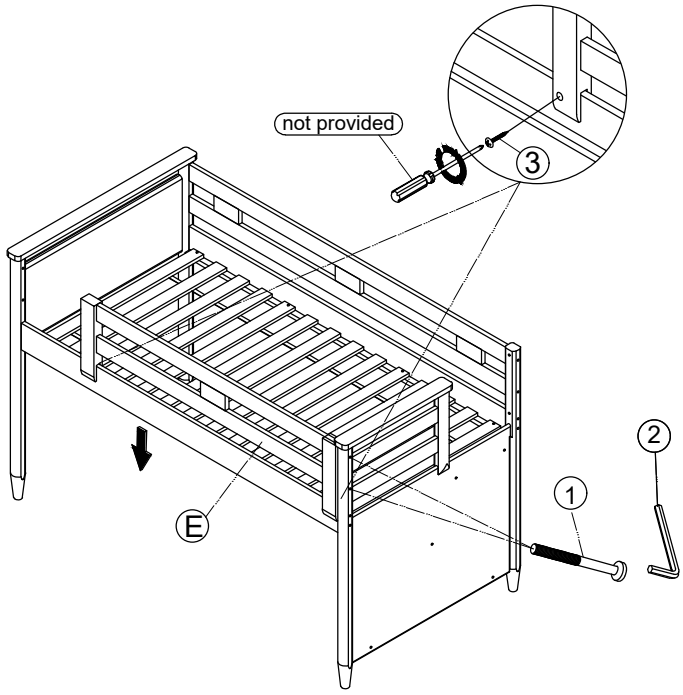

OPTION 2:
Full loft bed headboard is in the right-side.

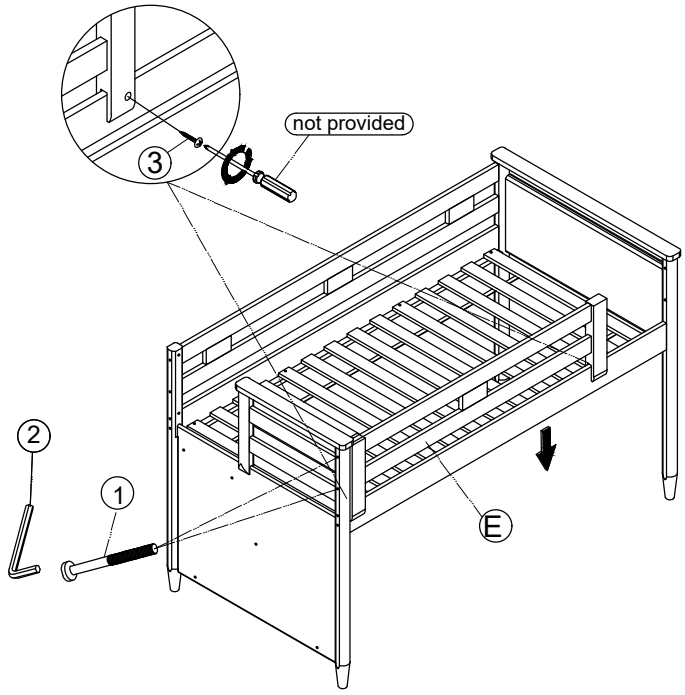

DO NOT USE SUBSTITUTE PARTS. PLEASE CONTACT YOUR RETAIL STORE OR WWW.ROOMSTOGO.COM WITH SERVICE OR PARTS REPLACEMENT REQUEST.

This product is manufactured by (JSFC) for ROOMS TO GO | KIDS

MODERN COLORS

FULL LOFT BED FOR STAIRCASE & SLIDE INSTALLATION

Thank you for purchasing this quality product. Be sure to check all packing material carefully for small parts which may have come loose inside the carton during shipment. Identify and count all parts and compare with the parts list below. Read all instructions before assembling bed and keep these instruction for future reference.

Assembly Instructions:

STEP 5

OPTION 1:
Full loft bed headboard is in the left-side.

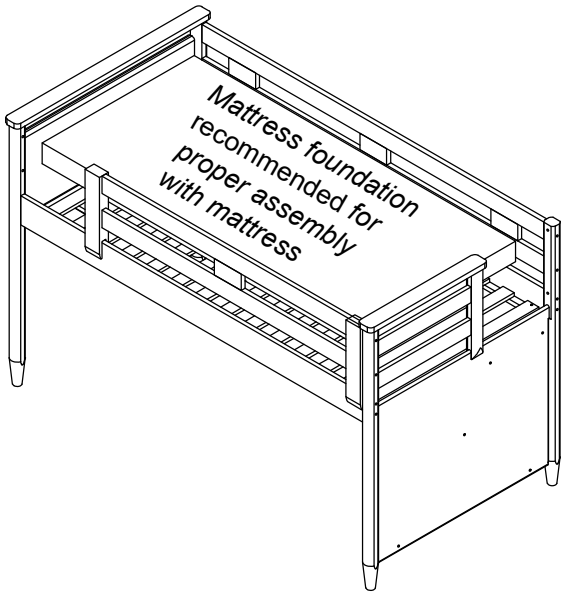

OPTION 2:
Full loft bed headboard is in the right-side.

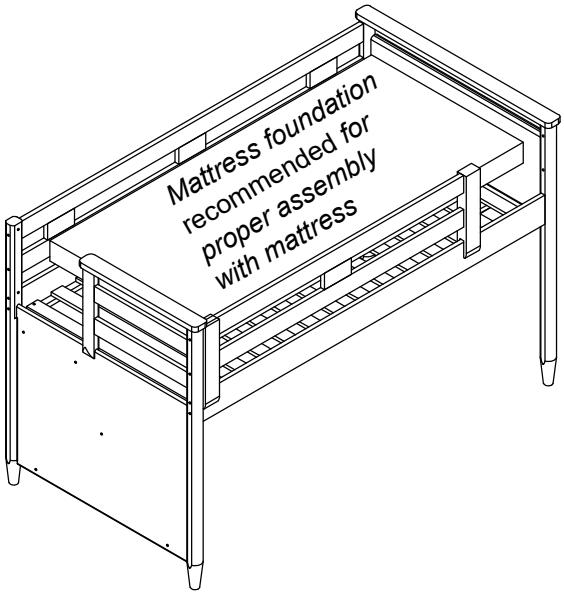

A mattress foundation is recommended for proper assembly with mattress.
Place the mattress foundation (not provided) on top.

DO NOT USE SUBSTITUTE PARTS. PLEASE CONTACT YOUR RETAIL STORE OR WWW.ROOMSTOGO.COM WITH SERVICE OR PARTS REPLACEMENT REQUEST.

This product is manufactured by (JSFC) for ROOMS TO GO | KIDS