ASSEMBLY INSTRUCTION

SNLM 6082-DT RECTANGLE DINING TABLE - SKU:42160820

Manufactured by (SNLM) for Rooms To Go

Version 2 - 06/16/2026

1. We recommend that you should assemble this product with the assistance of another person, this will make assembly easier and will eliminate damage to the product or injury to persons during assembly.
2. Please do not over tighten screws or bolts until assembly is complete.
3. Please put all parts on a non-abrasive floor before assembly, and follow assembly steps to assemble your newly purchased product correctly and efficiently.

No	PARTS LIST		QTY
A	Table Top	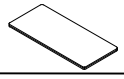	1pc
B	Legs Frame		2pcs
C	Wood stretcher	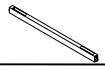	1pc

HARDWARE LIST			QTY
Pre-installed 1	Bolt Ø5/16"-18x60mm	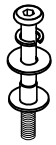	2pcs
	Lock washer Ø5/16x16x1mm		2pcs
	Flat washer Ø5/16x18x1mm		2pcs
	Threaded Washer		2pcs
Pre-installed 2	Bolt Ø5/16"-18x35mm		16pcs
	Lock washer Ø5/16x16x1mm		16pcs
	Flat washer Ø5/16x18x1mm		16pcs
	Threaded Washer		16pcs
3	Allen Key 4mm		1pc

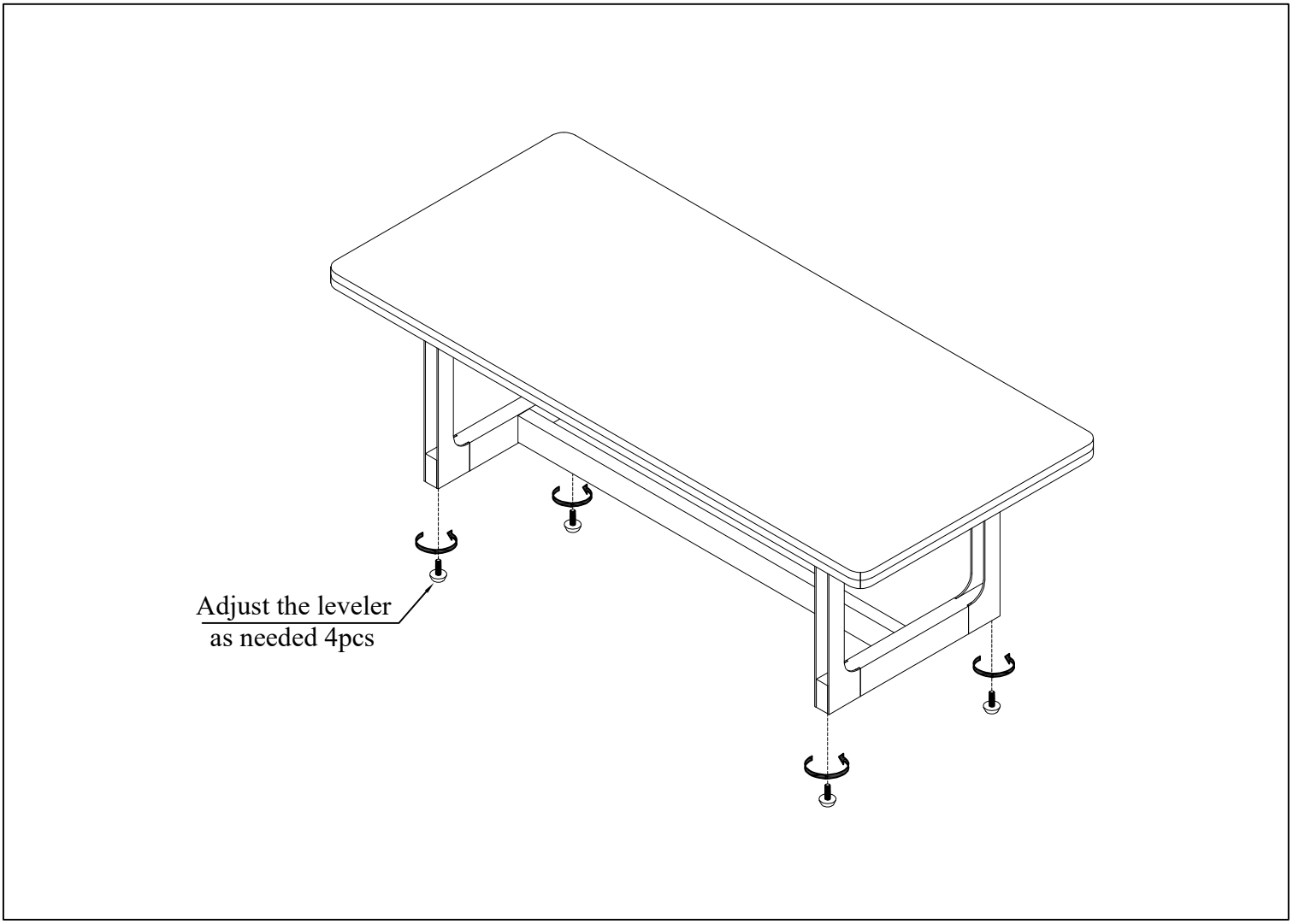

HARDWARE PACK LOCATION SNLM 6082-DT RECTANGLE DINING TABLE - SKU:42160820

Made in Viet Nam

ASSEMBLY INSTRUCTION

SNLM 6082-DT RECTANGLE DINING TABLE - SKU:42160820

Manufactured by (SNLM) for Rooms To Go

Version 2 - 06/16/2026

***Caution: Please read all instructions carefully before starting the assembly process. These parts are cumbersome and heavy. Therefore, two people are recommended in order to prevent personal injury and ensure the parts are not damaged during the assembly.

STEP 1 Attach the leg frame (B) to the table top (A) using the set capture lock (2) pre-installed in the leg frame. Tighten with the Allen key (3).

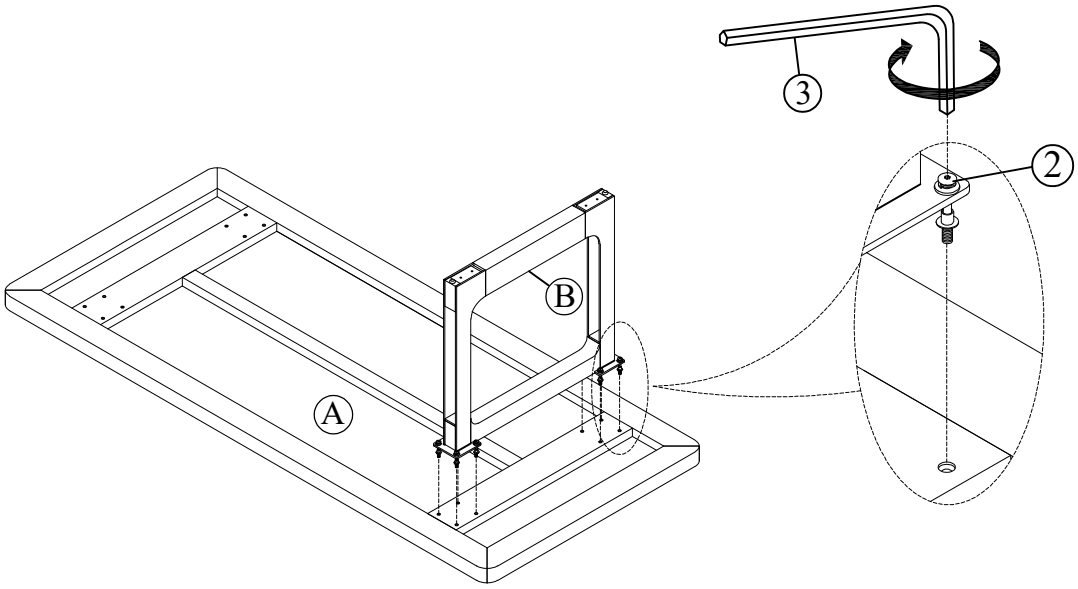

STEP 2 Attach the wood stretcher (C) and the remaining leg frame (B) to the frame created in Step 1 using the set capture lock (1) pre-installed on the wood stretcher (C) and the set capture lock (2) pre-installed on leg frame (B). Tighten with the Allen key (3).

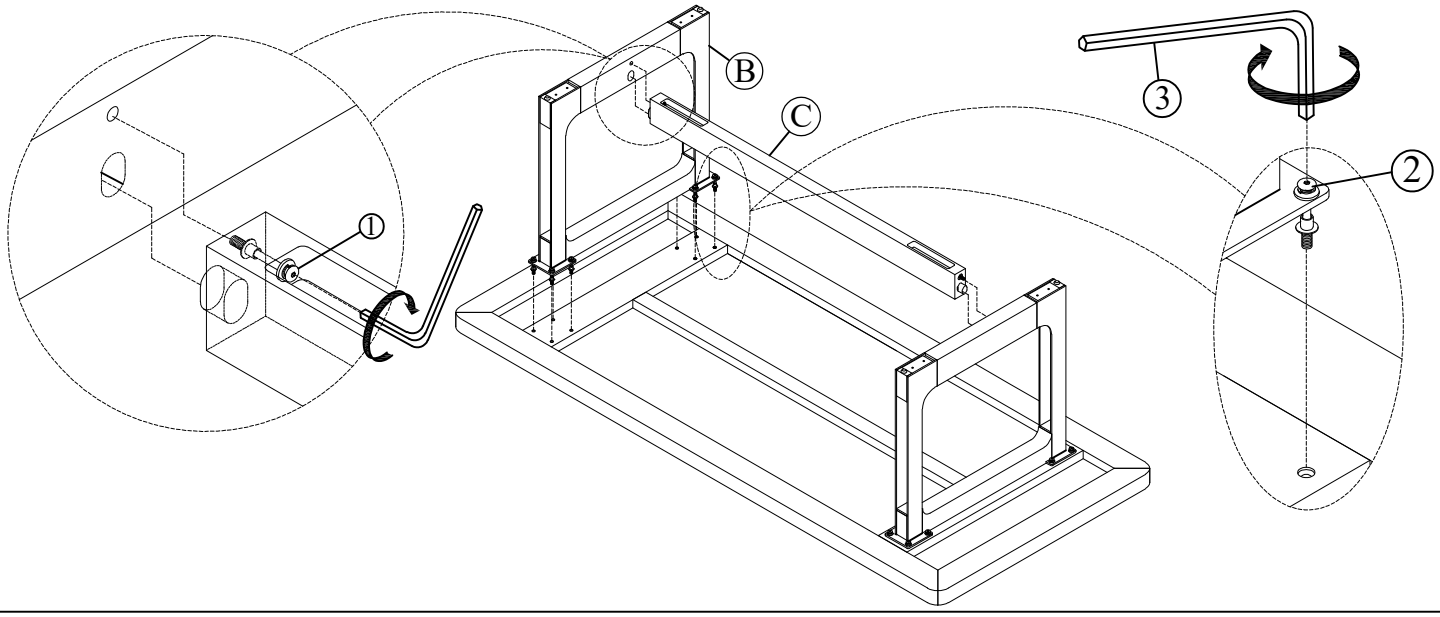

HARDWARE PACK LOCATION SNLM 6082-DT RECTANGLE DINING TABLE - SKU:42160820

Made in Viet Nam