ROOMS TO GO

Assembly Instruction

Manufactured by RVID for Rooms To Go

RVID: 579-58 SPLAT BACK SIDE CHAIR **SKU# 42457918**
581-58 SPLAT BACK SIDE CHAIR **SKU# 42458124**

Version #1 - 2026/03/20

*** Caution: Please read all instructions carefully before starting the assembly process. These parts are cumbersome and heavy Therefore, two people are recommended in order to prevent personal injury and ensure the parts are not damaged during the assembly

*** Note: Do not tighten all the bolts until the assembly is fully complete

CHAIR BOX

Code	PART LIST		
A	Chair Back		1PC
B	Seat		1PC
C	Front Legs		2PCS

Code	HARDWARE LIST		
1	Bolt 5/16"-18 x 3-1/2"	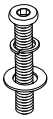	8PCS
	Spring Washer 5/16"		8PCS
	Flat Washer 5/16"*19mm		8PCS
	Threaded Washer 5/16"*10mm		8PCS
2	Bolt 1/4"-20 x 2"		3PCS
	Spring Washer 1/4"		3PCS
	Flat Washer 1/4"*19mm		3PCS
3	"L" Allen Key 4mm		1PC

STEP 1: Assemble the Front leg (C) to the Seat (B), using hardware as shown.

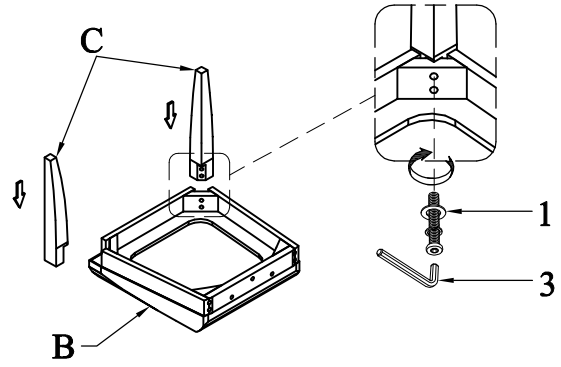

STEP 2.1: Assemble the Chair back (A) to the assemble completed in Step 1, using hardware as shown.

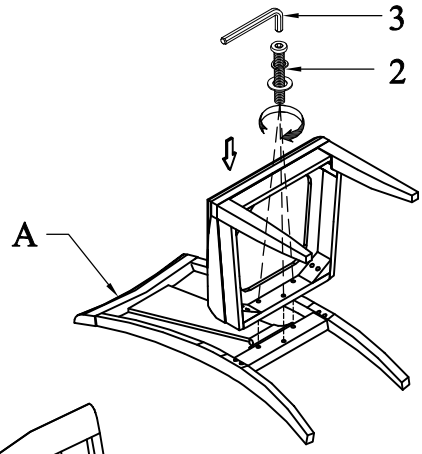

STEP 2.2: Screw the bolt (1) into the chair back (A). Using hardware as shown.

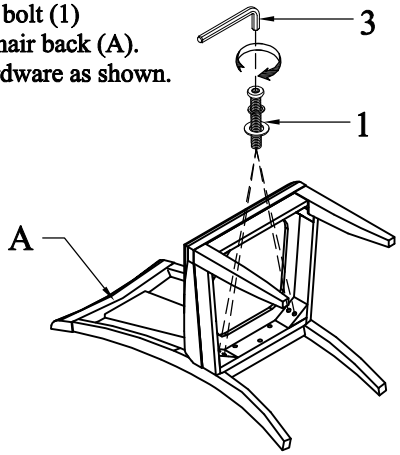

COMPLETE

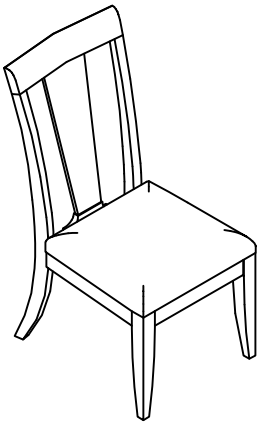

Hardware Pack Location(s):

579-58 SPLAT BACK SIDE CHAIR, **SKU# 42457918**
581-58 SPLAT BACK SIDE CHAIR, **SKU# 42458124**