ASSEMBLY INSTRUCTION

SNLM 6082-HC HOST CHAIR - SKU:42460826

Manufactured by (SNLM) for Rooms To Go

Version 2 - 06/10/2026

1. We recommend that you should assemble this product with the assistance of another person, this will make assembly easier and will eliminate damage to the product or injury to persons during assembly.
2. Please do not over tighten screws or bolts until assembly is complete.
3. Please put all parts on a non-abrasive floor before assembly, and follow assembly steps to assemble your newly purchased product correctly and efficiently.

PARTS LIST			QTY
A	Seat Frame		1pc
B	Back Left Leg		1pc
C	Back Right Leg		1pc
D	Front Left Leg	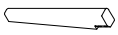	1pc
E	Front Right Leg		1pc
F	Left Brace		1pc
G	Right Brace		1pc

HARDWARE LIST				Q'ty
1	Allen Head Bolt	Ø5/16-18 x 50mm	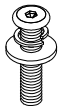	8pcs
	Lock Washer	Ø5/16" x Ø14 x 1mm		8pcs
	Flat Washer	Ø5/16" x Ø18 x 1mm		8pcs
2	Round head screw	Ø8 x 50mm		4pcs
3	Allen Key	4mm		1pc
4	Screw-driver (not provided)			1pc

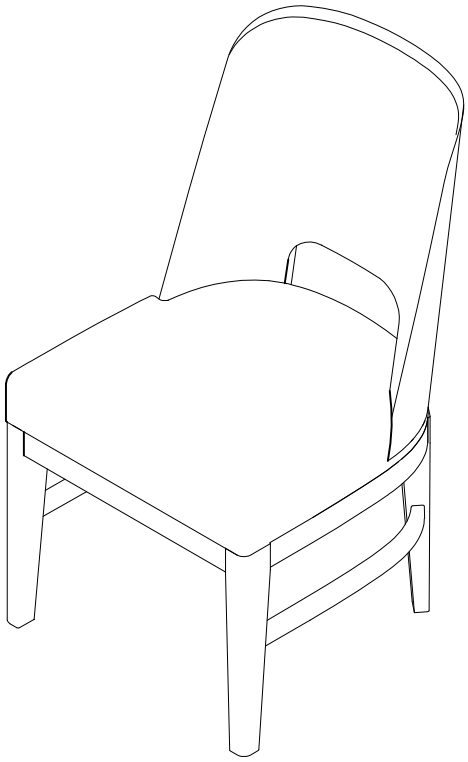

HARDWARE PACK LOCATION SNLM 6082-HC HOST CHAIR - SKU:42460826

Made in Viet Nam

ASSEMBLY INSTRUCTION

SNLM 6082-HC HOST CHAIR - SKU:42460826

Manufactured by (SNLM) for Rooms To Go

Version 2 - 06/10/2026

***Caution: Please read all instructions carefully before starting the assembly process. These parts are cumbersome and heavy. Therefore, two people are recommended in order to prevent personal injury and ensure the parts are not damaged during the assembly.

STEP 1

1. Attach the Front Leg (D)(E) and Back Leg (B)(C) to the corner block of the Seat Frame (A) using Bolt (1), Tighten all bolts with Allen Key (3). At the same time, rotate the inclined leg to attach the Brace (F)(G) using Round Head Screw (2). Tighten with a Phillips Head Screwdriver (not provided).

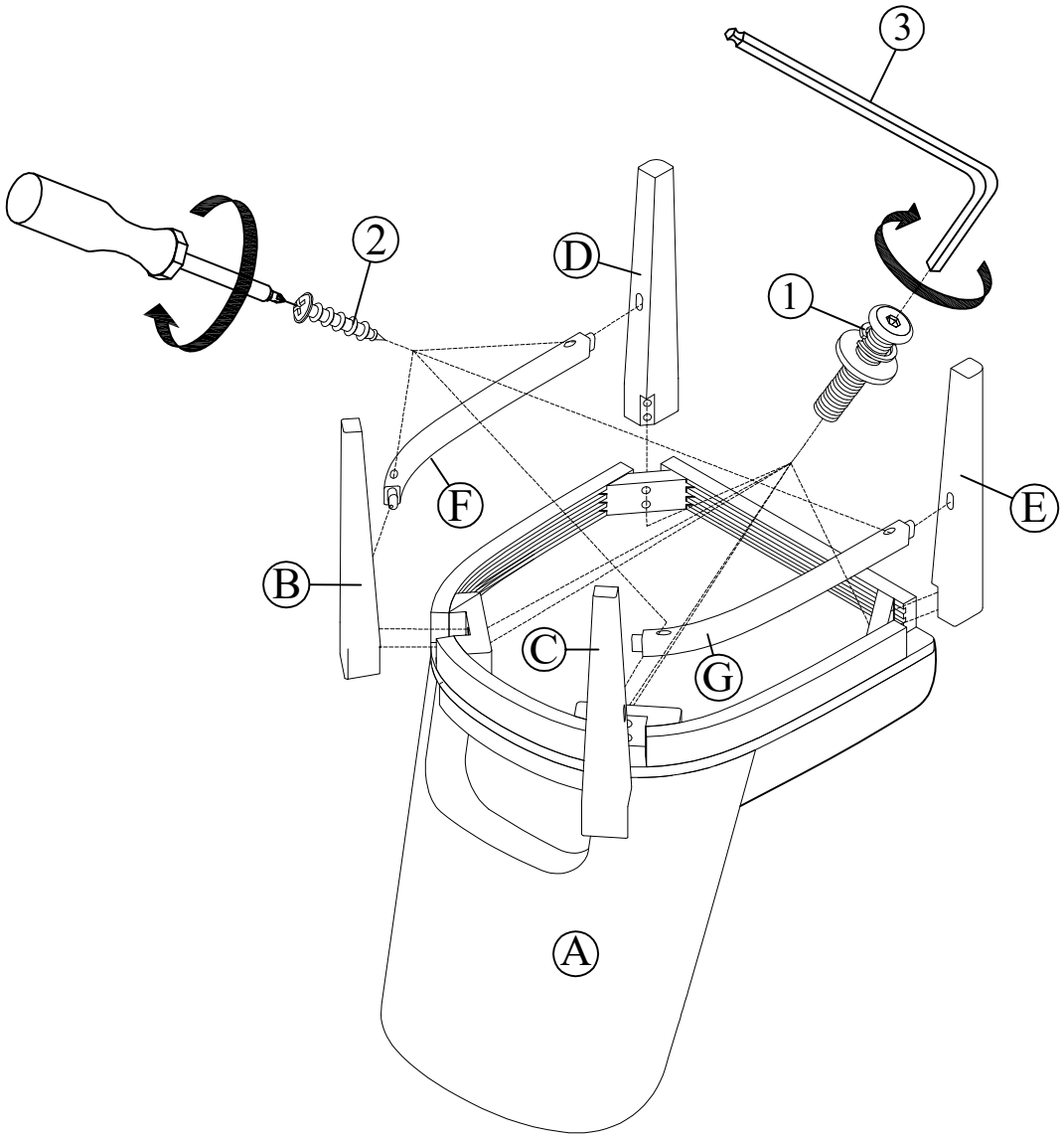

HARDWARE PACK LOCATION SNLM 6082-HC HOST CHAIR - SKU:42460826

Made in Viet Nam