ROOMS TO GO

Manufactured by RVID for Rooms To Go

Assembly Instruction

RVID: 579-59 UPHOLSTERED HOST CHAIR **SKU# 42657912**
581-59 UPHOLSTERED HOST CHAIR **SKU# 42658128**

Version #1 - 2026/03/20

*** Caution: Please read all instructions carefully before starting the assembly process. These parts are cumbersome and heavy Therefore, two people are recommended in order to prevent personal injury and ensure the parts are not damaged during the assembly

*** Note: Do not tighten all the bolts until the assembly is fully complete

CHAIR BOX

Code	PART LIST		
A	Chair Body		1PC
B	Front Leg		2PCS
C	Back Leg (Left)		1PC
D	Back Leg (Right)		1PC

Code	HARDWARE LIST		
1	Bolt 5/16"-18 x 3-1/2"	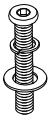	8PCS
	Spring Washer 5/16"		8PCS
	Flat Washer 5/16"*19mm		8PCS
	Threaded Washer 5/16"*10mm		8PCS
2	"L" Allen Key 4mm		1PC

Step 1: Open the zipper to assemble the legs

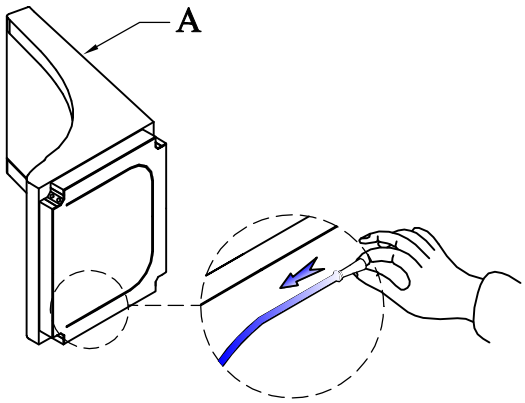

Step 2: Assemble the front leg (B)and back leg (C)&(D) to the Chair body (A), using hardware as shown.

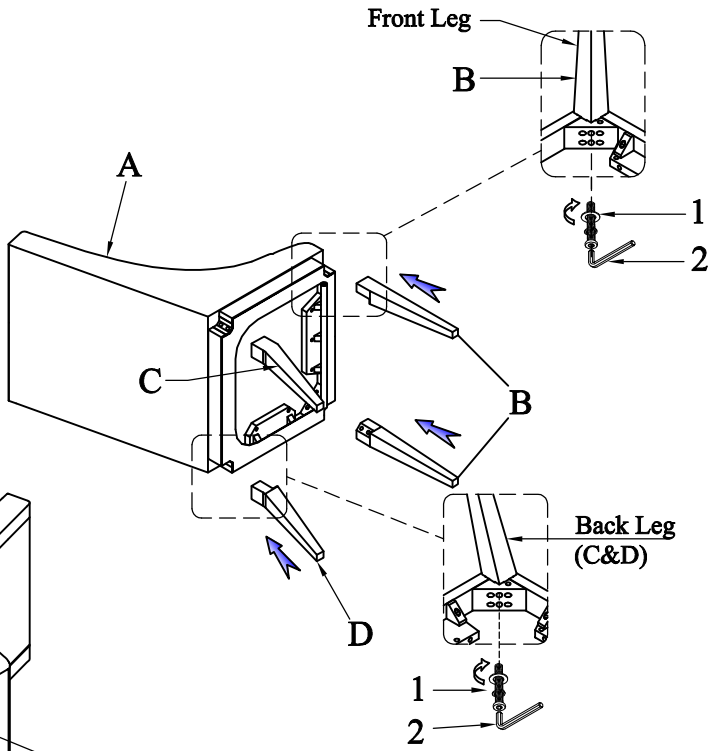

Step 3: Close zipper

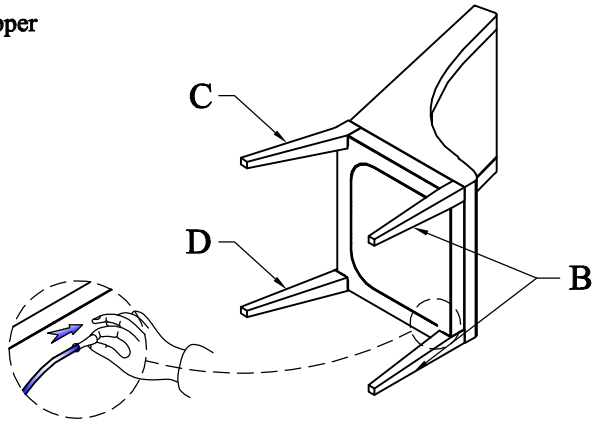

Hardware Pack Location(s):

579-59 UPHOLSTERED HOST CHAIR, **SKU# 42657912**
581-59 UPHOLSTERED HOST CHAIR, **SKU# 42658128**