ASSEMBLY INSTRUCTION

SNLM 6082-SV SERVER - SKU:42960826

Manufactured by (SNLM) for Rooms To Go

Version 2 - 21/05/2026

1. We recommend that you should assemble this product with the assistance of another person, this will make assembly easier and will eliminate damage to the product or injury to persons during assembly.
2. Please do not over tighten screws or bolts until assembly is complete.
3. Please put all parts on a non-abrasive floor before assembly, and follow assembly steps to assemble your newly purchased product correctly and efficiently.

No	PARTS LIST		QTY
A	Server		1pc

	HARDWARE LIST		QTY
1	Tipping restraint		1pc
2	Screw-driver (not provided)		1pc

★ Remark:
Anti-tip hardware must be installed by customer
Anti-tip hardware attached to the drawer of the Server

STEP 1 Move the Server into final position and use tipping restraint attach to wall. Insert the screw (1) by using the screwdriver.

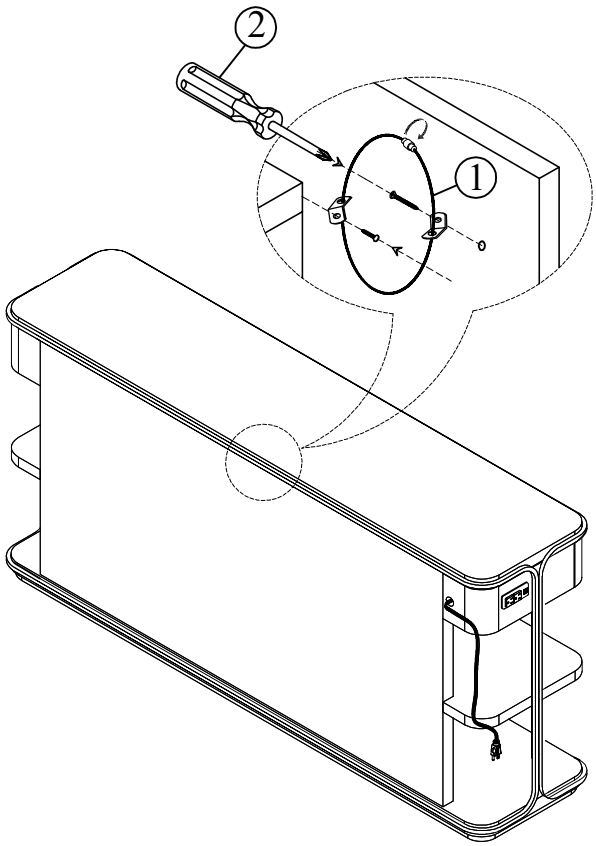

COMPLETED

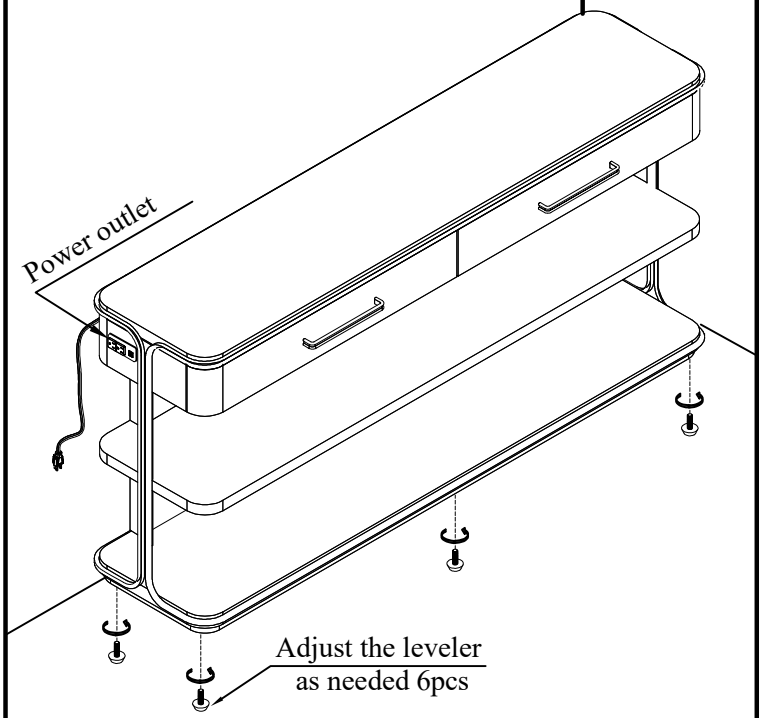

HARDWARE PACK LOCATION SNLM 6082-SV SERVER - SKU:42960826

Made in Viet Nam

IMPORTANT SAFETY INSTRUCTIONS

⚠ WARNING

Misuse can result in FIRE or DEATH by ELECTRICAL SHOCK

Furniture Power Distribution Unit
Input: 125V-50/60Hz 0.4A Max,
USB output: 5V 3A, 9V 2A, 12V 1.5A
Vantage City Group Limited
VAN-PSTR-AC

Read all instructions before using this furnishing.

DANGER – To reduce the risk of electric shock:

- Always unplug this furnishing from the electrical outlet before cleaning or servicing.

WARNING – To reduce the risk of burns, fire, electric shock, or injury to persons:

- Unplug from outlet before putting on or taking off parts.
- Never operate this furnishing if it has a damaged electrical cord or plug, if it is not working properly, or if the electrical cord or plug has been damaged or dropped into water. Stop using this furnishing and call a service center for examination and repair.
- Keep the electrical cord and plug away from heated surfaces and other heat sources.
- To disconnect, turn all controls to the off position, then remove plug from outlet.
- When operating, ensure that electrical cord is not under the base, legs, or motion mechanism to avoid damage to electrical cord or plug.
- Do not strain or stretch electrical cord.
- Do not use extension cords or power strips.
- Keep out of reach of children. This is not a toy.
- Plug directly into a compatible electrical socket.
- Do not modify the plug or use any adapters.

Made in Viet Nam

INSTRUCCIONES DE SEGURIDAD IMPORTANTES

⚠ WARNING

Al mal uso puede provocar INCENDIO o MUERTE por DESCARGA ELÉCTRICA

Furniture Power Distribution Unit
Input: 125V-50/60Hz 0.4A Max,
USB output: 5V 3A, 9V 2A, 12V 1.5A
Vantage City Group Limited
VAN-PSTR-AC

Leer todas las instrucciones antes de usar este mobiliario.

PELIGRO -Para reducir el riesgo de descarga electrica:

1. Siempre desenchufe este accesorio de la toma de corrientc eléctrica antes de limpiarlo o repararlo.

ADVERTENCIA - para reducir el riesgo de quemaduras, incendios, descargas **eléctricas o lesiones a personas:**

1. Desenchufe del tomacorriente antes de colocar o quitar partes.
2. Nunca opere este accesorio si tiene un cable o enchufe eléctrico dañado, si no funciona correctamente, o si el cable o el enchufe eléctrico se ha dañado o se ha caído al agua. Deje de usar este equipamiento y llame a un centro de servicio para que lo examinen y lo reparen.
3. Mantenga el cable eléctrico y el enchufe lejos de superficies calientes y otras fuentes de calor.
4. Para desconectar, gire todos los controles a la posición de apagado, luego retire el enchufe del tomacorriente.
5. Al operar, asegúrese de que el cable eléctrico no esté debajo de la base, las patas o el mecanismo de movimiento para evitar dañar el cable eléctrico o el enchufe.
6. No fuerce ni estire el cable eléctrico.
7. No utilizar cables de extensión o tomas de corriente.
8. Mantener fuera del alcance de los niños. Esto no es un juguete.
9. Enchúfelo directamente a una toma de corriente compatible.
10. No modifique el enchufe ni utilice adaptadores.

Made in Viet Nam

ELECTRICAL SAFETY INSTRUCTIONS

WARNING: DO not use extension cords or surge protectors unless they meet the following requirements:

•Cords must be 3rd party listed and rated for at least 15 amps at 120 V Third party listing symbol examples.

•Use the minimum length extension cord possible.

•Check the cord for fraying, cuts, melted areas, or other damage.

•Never plug an extension cord into another extension cord.

•Household outlets should be GFCI protected, otherwise a GFCI protected extension cord should be used.

Made in Viet Nam