ROOMS TO GO PATIO™

Manufactured by EXGM for Rooms to Go

ASSEMBLY INSTRUCTIONS

EXGM HARLOWE SLING CHAISE

SKU#70532114

Step 1: Put the Left Leg (Part B) to the frames, assemble them by Washers(Part F), Screws (Part D) ,Screws (Part E)and Screw Covers(Part G).

Step 2: Put the Right Leg(Part C) to the frames and assemble them by by Washers(Part F), Screws (Part D) ,Screws (Part E)and Screw Covers(Part G).

Warning: Do not fully tighten the screws at the start of assembly, otherwise the screws will be stripped.

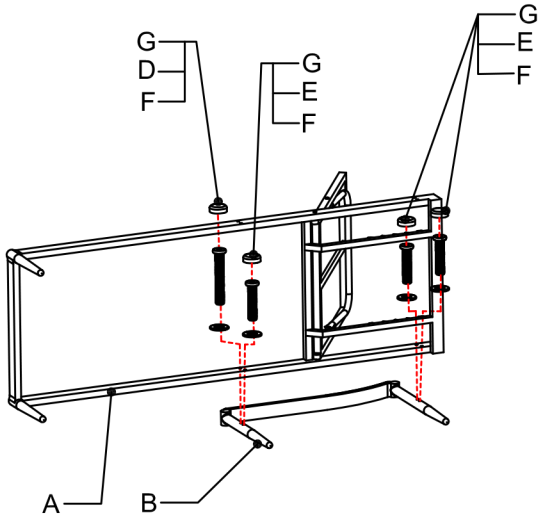

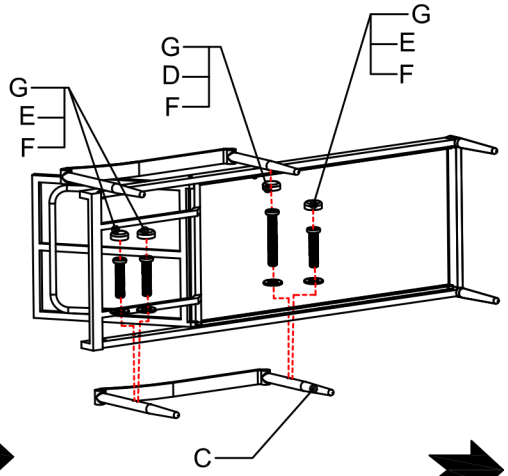

After all hardware have been assembled, fully tighten each one with the Allen Key. After assembly, your product is ready for use.

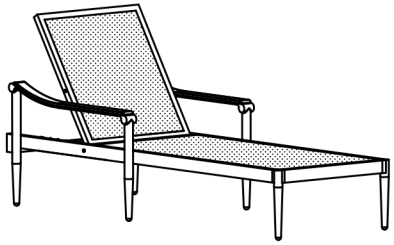

PARTS LIST

NO.	A	B	C	D	E	F	G	H
DESC	Bed	Left Leg	Right Leg	Screw 1/4-34*65	Screw 1/4-30*40	Washer	Screw Cover	Allen Key
PIC	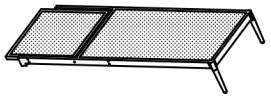							
QTY	1pc	1pc	1pc	2pcs	6pcs	8pcs	8pcs	1pc

Care and Use directions

CARE & MAINTENANCE

The furniture should be washed with a mild solution of soap and water. Rinse with clean water and dry with a soft towel. DO NOT use bleach or strong solvents to clean any of your patio furniture.

STORAGE SUGGESTIONS

Always be sure to drain any water accumulated on the furniture. The best way to maintain your furniture & cushions is store them in dry areas out of the elements. Covering is recommended with commercially available furniture covers, when your furniture is not in use. Using your furniture under cover is recommended.