ROOMS TO GO PATIO™

Manufactured by EFAR for Rooms To Go

ASSEMBLY INSTRUCTIONS

2233 - TOCCOA DN ARM CHAIR

SKU: 74522333

Thanks for purchasing this quality product. Be sure to check all packing materials carefully for small parts, which may have come loose inside the carton during shipment. Identify and count all parts and compare with the Hardware List below

PARTS LIST

NO.:	PIC	DESC	QTY
A	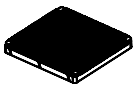	Seat Part	1pcs
B		Leg Part Left	1pcs
C		Leg Part Right	1pcs
D		Back	1pcs
E		Seat Cushion	1pcs

HARDWARES LIST

NO.:	PIC	DESC	QTY
F		Bolts M6x35	10pcs
G		Spring washer M6	10pcs
H		Washer M6	10pcs
I		Bolts M6x20	4pcs
G		Spring washer M6	4pcs
H		Washer M6	4pcs
J		Allen Key 4x8mm	1pcs

Hardware Pack Location(s): Bottom of the chair that the bases are attached to.

TOCCOA DN ARM CHAIR, 74522333

ROOMS TO GO PATIO™

Manufactured by EFAR for Rooms To Go

ASSEMBLY INSTRUCTIONS

2233 - TOCCOA DN ARM CHAIR

SKU: 74522333

Thanks for purchasing this quality product. Be sure to check all packing materials carefully for small parts, which may have come loose inside the carton during shipment. Identify and count all parts and compare with the Hardware List below

Step 1: Place the Leg part left (Part B) on the clean, soft surface as a blanket or carpet. Assemble the Seat part (Part A) to the Leg part left (Part B) by Bolts M6, Spring washers M6, Washers M6 (Part F, G, H) and loosely tightening with Allen key (Part J).
When inserting the bolts, loosely tighten each about 5-6 full turns and ensure each of the 5 bolts fit well.
Once all 5 are inserted and loosely tightened, proceed to fully tighten each bolt.

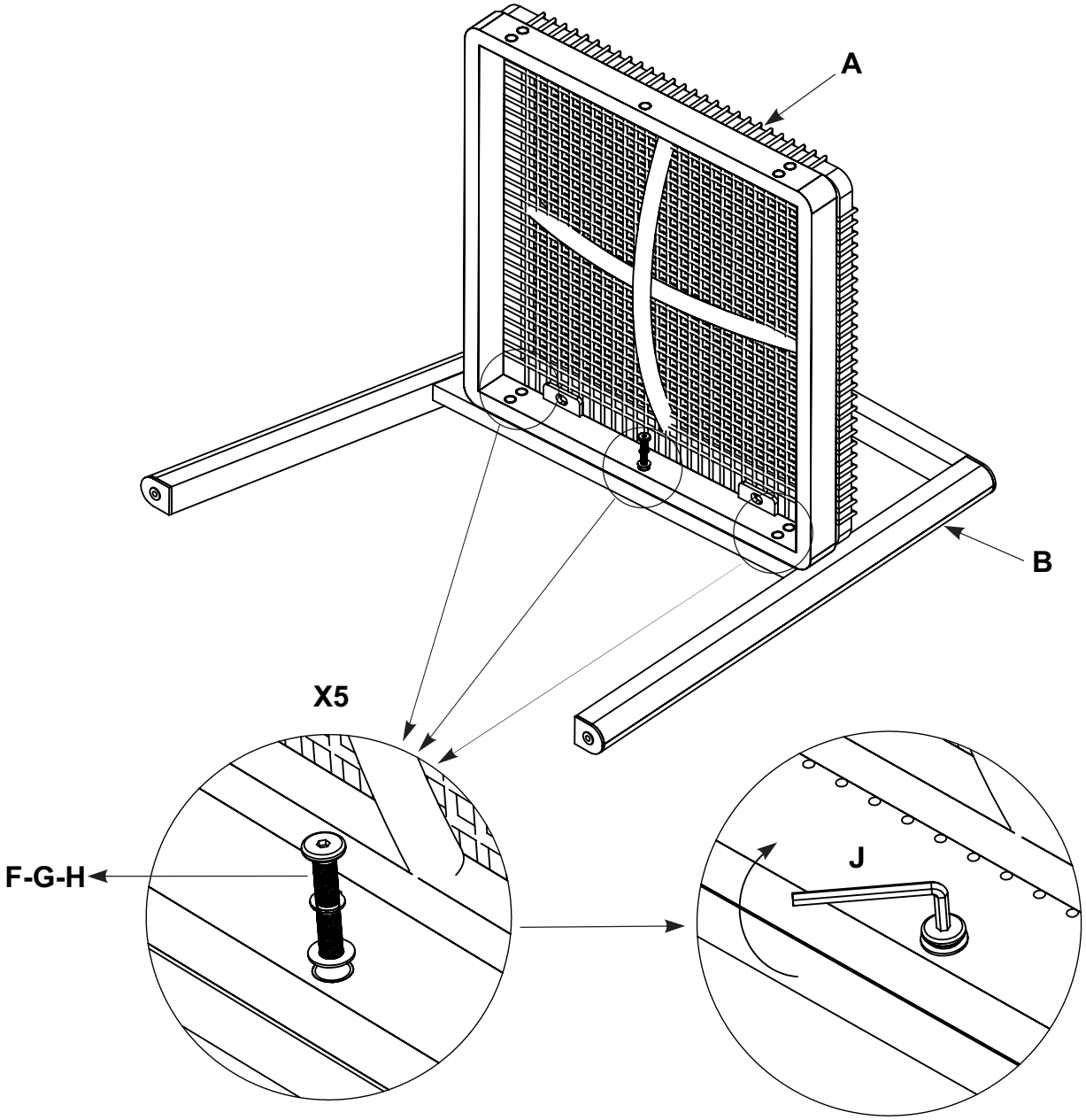

ASSEMBLY INSTRUCTIONS

2233 - TOCCOA DN ARM CHAIR

SKU: 74522333

Step 2: Place the Leg part right (Part C) on the clean, soft surface as a blanket or carpet. Assemble the Seat part (Part A) to the Leg part right (Part C) by Bolts M6, Spring washers M6, Washers M6 (Part F, G, H) and loosely tightening with Allen key (Part J).
When inserting the bolts, loosely tighten each about 5-6 full turns and ensure each of the 5 bolts fit well.
Once all 5 are inserted and loosely tightened, proceed to fully tighten each bolt.

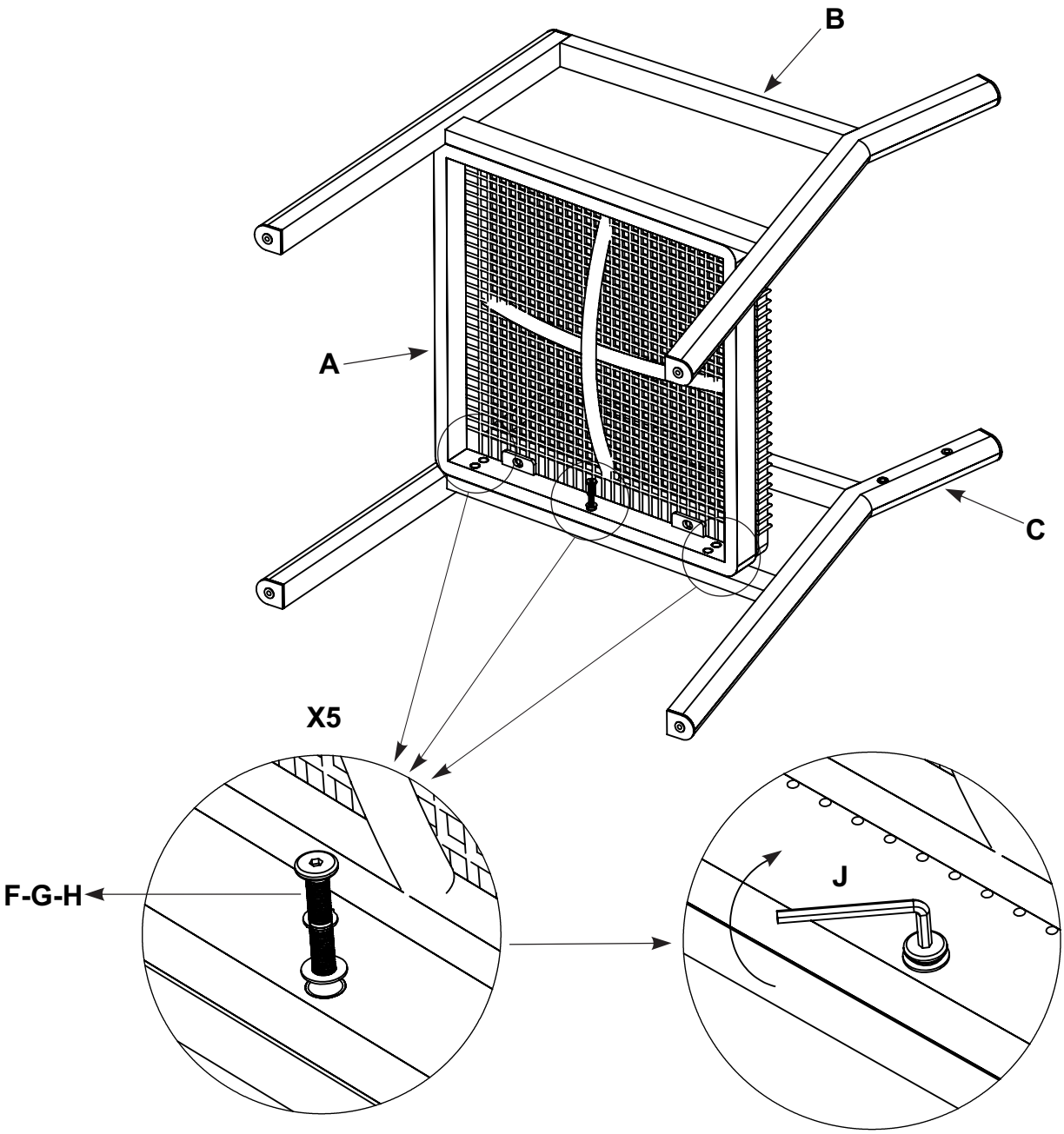

ASSEMBLY INSTRUCTIONS

2233 - TOCCOA DN ARM CHAIR

SKU: 74522333

Step 3: Assemble the Back part (Part D) to the Leg part right (Part C) anh Leg part left (Part B) by Bolts M6, Spring washers M6, Washers M6 (Part I, G, H) and loosely tightening with Flexible drill extension.
When inserting the bolts, loosely tighten each about 5-6 full turns and ensure each of the 4 bolts fit well.
Once all 4 are inserted and loosely tightened, proceed to fully tighten each bolt.

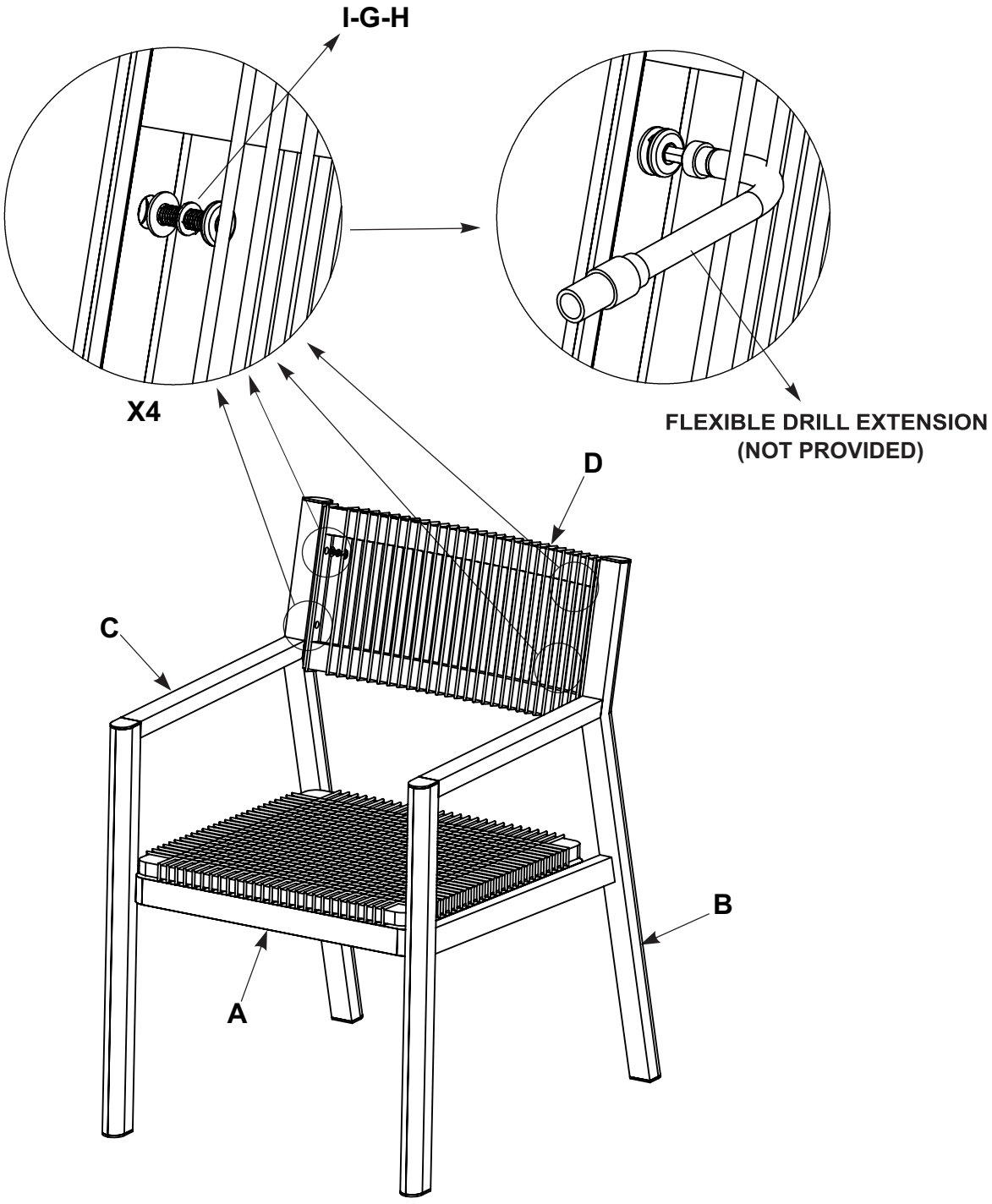

ASSEMBLY INSTRUCTIONS

2233 - TOCCOA DN ARM CHAIR

SKU: 74522333

Step 4: After assembly, put the seat cushion (Part E) on product and your product is ready to use.

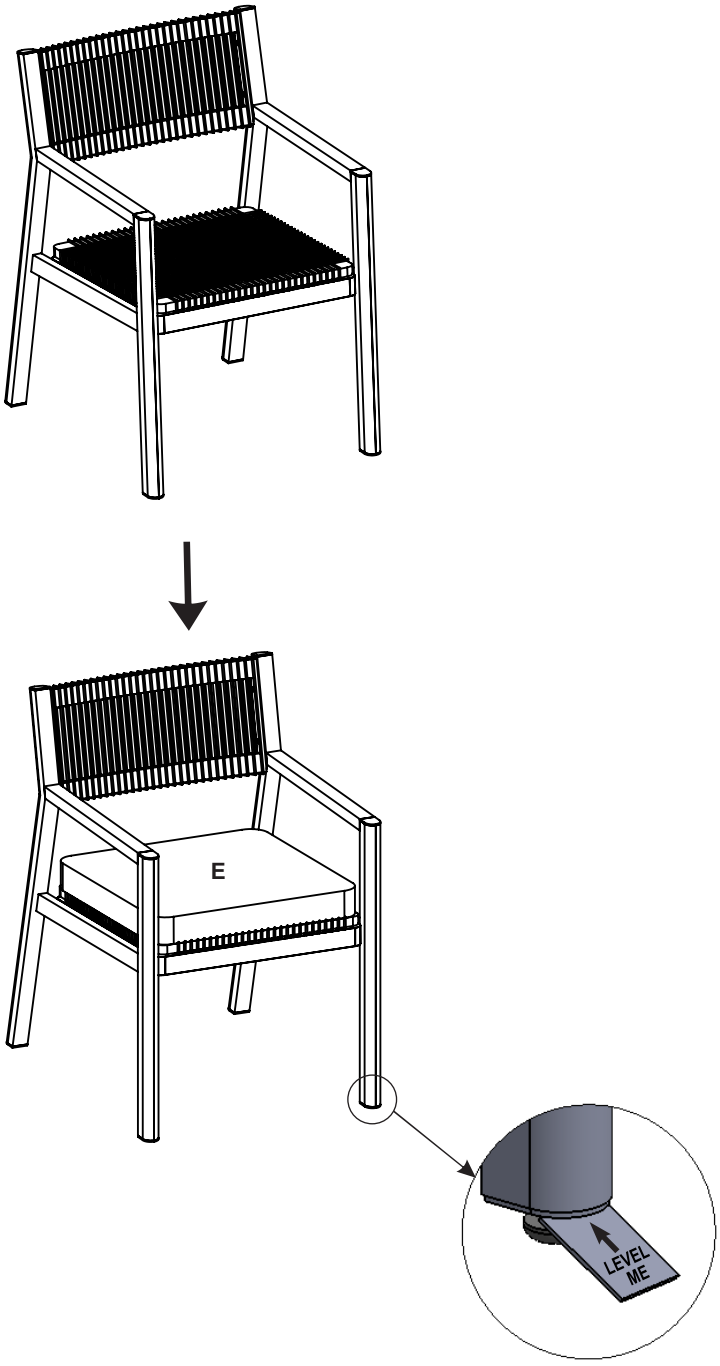

Adjustable Levelers (4x)

Periodically check and make sure all bolts are fully tightened.

Assembly Completed