# ASSEMBLY INSTRUCTIONS

**TL336079RTG BLUE GLASS ORB TABLE LAMP**

Manufactured by (STLO) for Rooms To Go SKU# 90184640

Important Safety Instructions:

This portable luminaire has a polarized plug (one blade is wider than the other) as a safety feature to reduce risk of electric shock. This plug will fit in a polarized outlet only one way. If the plug does not fit fully in the outlet,reverse the plug. If it still does not fit, contact a qualified electrician. Never use with an extension cord unless plug can be fully inserted. Do not alter the plug. Do not attempt to defeat this safety feature.

---

These instructions are provided for your safety. It is very important that they are read carefully and completely before beginning the assembly and installation of this lighting fixture.

---

This fixture has been rated for up to one 40-watt maximum TYPE A standard incandescent light bulb (not included).To avoid the risk of fire do not exceed the recommended lamp wattage.

---

This lamp is meant for indoor use.
Dry locations only.

**WARNING:**

. To reduce the risk of fire,electrical shock or personal injury, always turn off and unplug the light fixture and allow it to cool prior to replacing the light bulb.

. Do not touch bulb when fixture is turned on. Do not look directly at lit bulb.

. Keep flammable materials away from lit bulb.

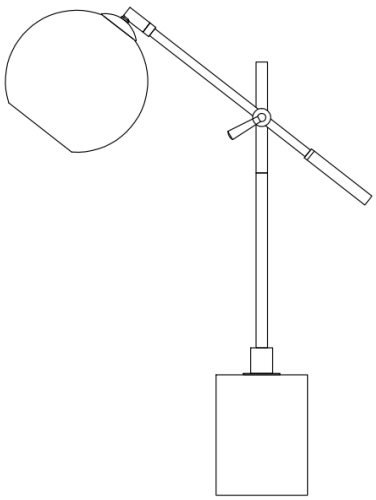

| Hardware List | | | |
|---|---|---|---|
| NO. | DESCRIPTION | IMAGE | QTY |
| 1 | Washer |  | 1PCS |
| 2 | Nut |  | 1PCS |
| 3 | Spanner |  | 1PCS |

Hardware Pack Location(s):Follow the red rope outside one corer of master brown carton, the other end of the rope connected to the hardware bag.

# ASSEMBLY INSTRUCTIONS

**TL336079RTG BLUE GLASS ORB TABLE LAMP**

Manufactured by (STLO) for Rooms To Go SKU# 90184640

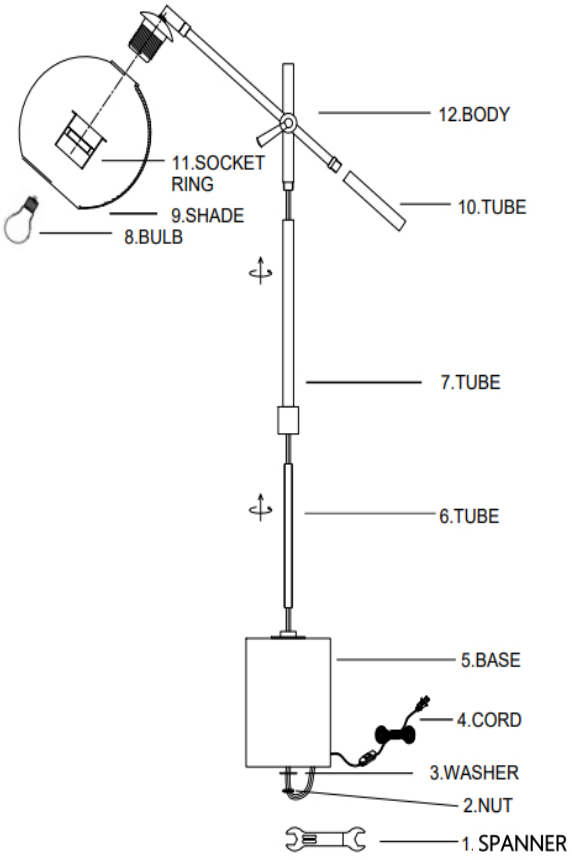


**ASSEMBLY INSTRUCTIONS**

Note:Before you begin,separate all parts and compare them to the illustration to ensure a complete assembly.

1. Carefully unpack parts from carton,remove covering from parts and check thatall parts are included as shown in theillustration.
2. Insert tube(7) into body(12),tube(6) into tube(7), then tighten manually.
3. Insert the tube (6) into the base (5). Ensure the lamp shade(9) and the base (5) are facing the same direction before fully tightening, then use washer (3),nut (2) and spanner(1) to tighten (spanner is included).
4. Place the shade (9) onto lamp socket,and secure with the socket ring (11).
5. Screw tube(10) into body(12).
6. Install the bulbs(8) into the socket(bulbs are not included).Adjust the angle of the lampshade rod to the position you need.

Hardware Pack Location(s):Follow the red rope outside one corer of master brown carton, the other end of the rope connected to the hardware bag.

# ASSEMBLY INSTRUCTIONS

**TL336079RTG BLUE GLASS ORB TABLE LAMP**

Manufactured by (STLO) for Rooms To Go SKU# 90184640

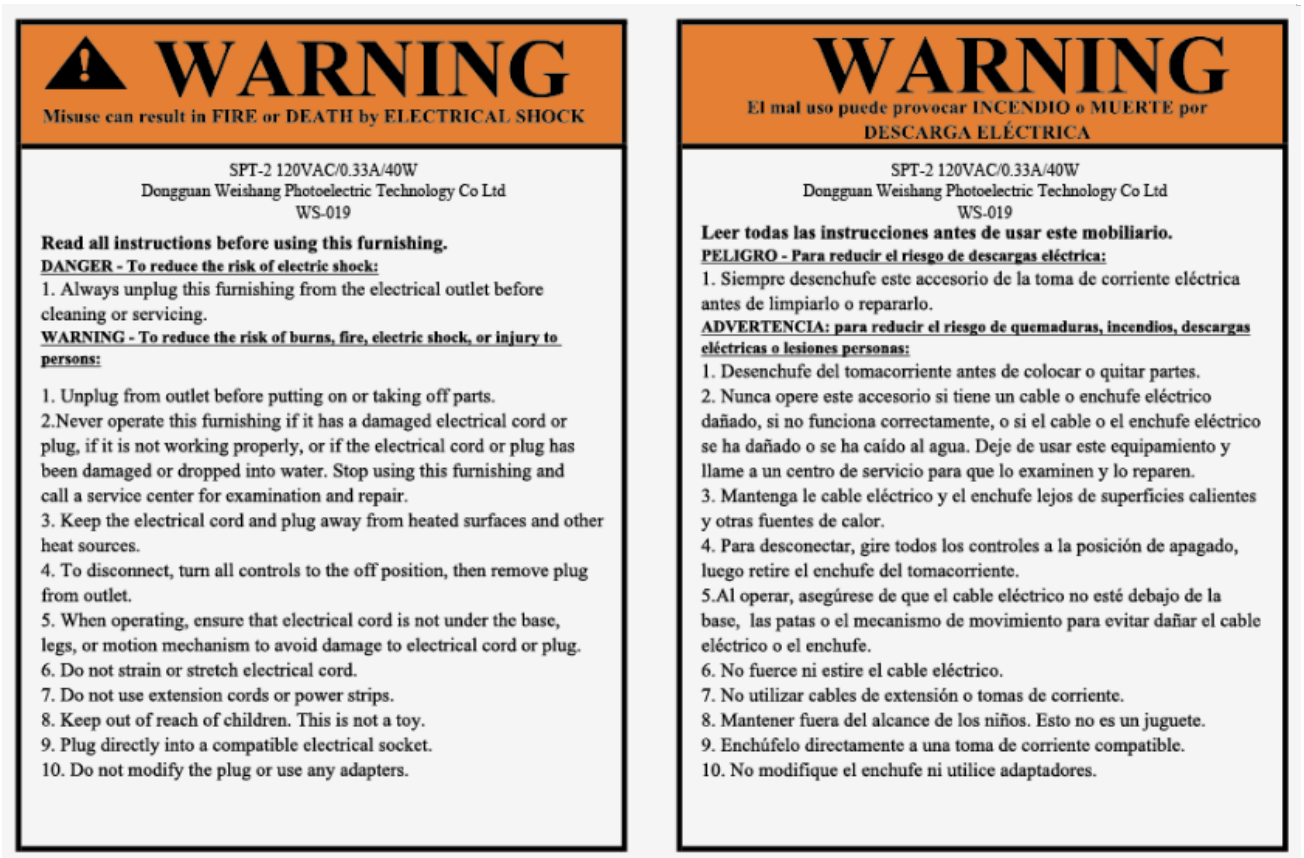

**WARNING**

Misuse can result in FIRE or DEATH by ELECTRICAL SHOCK

SPT-2 120VAC/0.33A/40W
Dongguan Weishang Photoelectric Technology Co Ltd
WS-019

**Read all instructions before using this furnishing.**

**DANGER - To reduce the risk of electric shock:**

1. Always unplug this furnishing from the electrical outlet before cleaning or servicing.

**WARNING - To reduce the risk of burns, fire, electric shock, or injury to persons:**

1. Unplug from outlet before putting on or taking off parts.
2. Never operate this furnishing if it has a damaged electrical cord or plug, if it is not working properly, or if the electrical cord or plug has been damaged or dropped into water. Stop using this furnishing and call a service center for examination and repair.
3. Keep the electrical cord and plug away from heated surfaces and other heat sources.
4. To disconnect, turn all controls to the off position, then remove plug from outlet.
5. When operating, ensure that electrical cord is not under the base, legs, or motion mechanism to avoid damage to electrical cord or plug.
6. Do not strain or stretch electrical cord.
7. Do not use extension cords or power strips.
8. Keep out of reach of children. This is not a toy.
9. Plug directly into a compatible electrical socket.
10. Do not modify the plug or use any adapters.

**WARNING**

El mal uso puede provocar INCENDIO o MUERTE por DESCARGA ELÉCTRICA

SPT-2 120VAC/0.33A/40W
Dongguan Weishang Photoelectric Technology Co Ltd
WS-019

**Leer todas las instrucciones antes de usar este mobiliario.**

**PELIGRO - Para reducir el riesgo de descargas eléctrica:**

1. Siempre desenchufe este accesorio de la toma de corriente eléctrica antes de limpiarlo o repararlo.

**ADVERTENCIA: para reducir el riesgo de quemaduras, incendios, descargas eléctricas o lesiones personas:**

1. Desenchufe del tomacorriente antes de colocar o quitar partes.
2. Nunca opere este accesorio si tiene un cable o enchufe eléctrico dañado, si no funciona correctamente, o si el cable o el enchufe eléctrico se ha dañado o se ha caído al agua. Deje de usar este equipamiento y llame a un centro de servicio para que lo examinen y lo reparen.
3. Mantenga le cable eléctrico y el enchufe lejos de superficies calientes y otras fuentes de calor.
4. Para desconectar, gire todos los controles a la posición de apagado, luego retire el enchufe del tomacorriente.
5. Al operar, asegúrese de que el cable eléctrico no esté debajo de la base, las patas o el mecanismo de movimiento para evitar dañar el cable eléctrico o el enchufe.
6. No fuerce ni estire el cable eléctrico.
7. No utilizar cables de extensión o tomas de corriente.
8. Mantener fuera del alcance de los niños. Esto no es un juguete.
9. Enchúfelo directamente a una toma de corriente compatible.
10. No modifique el enchufe ni utilice adaptadores.

Hardware Pack Location(s):Follow the red rope outside one corer of master brown carton, the other end of the rope connected to the hardware bag.